Keysight 2-Port and 4-Port PNA-X Network Analyzer

N5244B 900 Hz to 43.5 GHz
N5245B 900 Hz to 50 GHz

(for synthesizer revision 7)

KEYSIGHT

TECHNICAL SPECIFICATIONS

Documentation Warranty

THE MATERIAL CONTAINED IN THIS DOCUMENT IS PROVIDED "AS IS," AND IS SUBJECT TO BEING CHANGED, WITHOUT NOTICE, IN FUTURE EDITIONS. FURTHER, TO THE MAXIMUM EXTENT PERMITTED BY APPLICABLE LAW, KEYSIGHT DISCLAIMS ALL WARRANTIES, EITHER EXPRESS OR IMPLIED WITH REGARD TO THIS MANUAL AND ANY INFORMATION CONTAINED HEREIN, INCLUDING BUT NOT LIMITED TO THE IMPLIED WARRANTIES OF MERCHANTABILITY AND FITNESS FOR A PARTICULAR PURPOSE. KEYSIGHT SHALL NOT BE LIABLE FOR ERRORS OR FOR INCIDENTAL OR CONSEQUENTIAL DAMAGES IN CONNECTION WITH THE FURNISHING, USE, OR PERFORMANCE OF THIS DOCUMENT OR ANY INFORMATION CONTAINED HEREIN. SHOULD KEYSIGHT AND THE USER HAVE A SEPARATE WRITTEN AGREEMENT WITH WARRANTY TERMS COVERING THE MATERIAL IN THIS DOCUMENT THAT CONFLICT WITH THESE TERMS, THE WARRANTY TERMS IN THE SEPARATE AGREEMENT WILL CONTROL.

U.S. Government Rights

U.S. Government Rights. The Software is “commercial computer software,” as defined by Federal Acquisition Regulation (“FAR”) 2.101. Pursuant to FAR 12.212 and 27.405-3 and Department of Defense FAR Supplement (“DFARS”) 227.7202, the U.S. government acquires commercial computer software under the same terms by which the software is customarily provided to the public. Accordingly, Keysight provides the Software to U.S. government customers under its standard commercial license, which is embodied in its End User License Agreement (EULA), a copy of which can be found at http://www.keysight.com/find/sweula. The license set forth in the EULA represents the exclusive authority by which the U.S. government may use, modify, distribute, or disclose the Software. The EULA and the license set forth therein, does not require or permit, among other things, that Keysight: (1) Furnish technical information related to commercial computer software or commercial computer software documentation that is not customarily provided to the public; or (2) Relinquish to, or otherwise provide, the government rights in excess of these rights customarily provided to the public to use, modify, reproduce, release, perform, display, or disclose commercial computer software or commercial computer software documentation. No additional government requirements beyond those set forth in the EULA shall apply, except to the extent that those terms, rights, or licenses are explicitly required from all providers of commercial computer software pursuant to the FAR and the DFARS and are set forth specifically in writing elsewhere in the EULA. Keysight shall be under no obligation to update, revise or otherwise modify the Software. With respect to any technical data as defined by FAR 2.101, pursuant to FAR 12.211 and 27.404.2 and DFARS 227.7102, the U.S. government acquires no greater than Limited Rights as defined in FAR 27.401 or DFAR 227.7103-5 (c), as applicable in any technical data.

Table of Contents

Documentation Warranty 2
U.S. Government Rights 2
Definitions 10
Dynamic Range 12
System Dynamic Range 13
Table 1. System Dynamic Range at Test Port (dB), Options 201 or 401 13
Table 2. System Dynamic Range at Test Port (dB), Options 21x or 41x 14
Table 3. System Dynamic Range at Test Port (dB), Option 22x 15
Table 4. System Dynamic Range at Test Port (dB), Options 22x, 422, or 423 16
Table 5. System Dynamic Range at Test Port (dB), Options (22x, 422, or 423) with 029[1] 17
Table 6. System Dynamic Range at Test Port (dB), Option 425 18
Table 7. System Dynamic Range at Test Port (dB), Option 425 (LFE Enabled) 19
Table 8. System Dynamic Range at Test Port (dB), Option 425 (LFE Enabled), Combine Mode - Typical 19
Table 9. System Dynamic Range at Test Port (dB), Option 425 with 029 20
Extended Dynamic Range 21
Table 10. Extended Dynamic Range at Direct Receiver Access Input (dB) - Typical 21
Table 11. Extended Dynamic Range at Direct Receiver Access Input (dB) – Typical 22
Table 12. Extended Dynamic Range at Direct Receiver Input (dB), Options 422 or 423 with 029[1] - Typical 23
Table 13. Extended Dynamic Range at Direct Receiver Access Input (dB), Option 425 - Typical 24
Table 14. Extended Dynamic Range at Direct Receiver Access Input (dB), Option 425 with 029 - Typical 25
Receiver Dynamic Range 26
Table 15. Receiver Dynamic Range (dB), All Options 26
Table 16. Receiver Dynamic Range (dB), All Ports, Option 425 (LFE Enabled) 26
Corrected System Performance, All Options 27
Table 17. 85056A Calibration Kit 27
Transmission Uncertainty 28
Reflection Uncertainty 28
Table 18. 85056A Calibration Kit, LFE Enabled (Option 425) 29
Transmission Uncertainty, Option 425 29
Reflection Uncertainty, Option 425 29
Table 19. 85056D Calibration Kit 30
Transmission Uncertainty 30
Reflection Uncertainty 30
Table 20. N4693A Calibration Kit 31

Transmission Uncertainty 31
Reflection Uncertainty 31
Table 21. N4693A Calibration Kit, LFE Enabled (Option 425) 32
Transmission Uncertainty, Option 425 32
Reflection Uncertainty, Option 425 32
Table 22. N4693D Calibration Kit 33
Transmission Uncertainty 33
Reflection Uncertainty 33
Table 23. N4693D Calibration Kit, LFE Enabled (Option 425) 34
Transmission Uncertainty, Option 425 34
Reflection Uncertainty, Option 425 34
Uncorrected System Performance 35
Table 24. Directivity, All Options, All Ports (dB) 35
Table 25. Source Match (dB) 36
Table 26. Load Match (dB) 37
Table 27. Reflection /Transmission Tracking, Crosstalk (dB), All Options, All Ports-Typical 37
Table 28. Noise Mode[1] Uncorrected System Performance (dB), Option 029 - Specification 38
Table 29. Noise Mode[1] Uncorrected System Performance (dB), Option 029 - Typical 38
Table 30. Uncorrected System Performance (dB), All Ports, Option 425 (LFE Enabled) - Specifications 39
Table 31. Uncorrected System Performance (dB), All Ports, Option 425 (LFE Enabled)- Typical 39
Test Port Output 40
Table 32. Frequency Information, All Options 40
Table 33. Maximum Leveled Power (dBm), Options 201 or 401 41
Table 34. Maximum Leveled Power (dBm), Options 21x or 41x 42
Table 35. Maximum Leveled Power (dBm), Options 22x, 422, or 423 43
Table 36. Maximum Leveled Power (dBm), Option 425 44
Table 37. Maximum Leveled Power (dBm), Options 22x, 422, or 423, Combine Mode - Typical 45
Table 38. Maximum Leveled Power (dBm), Option 425, Combine Mode - Typical 45
Table 39. Maximum Leveled Power (dBm), Port 1 and 2, Option 425 with 029[1] 46
Table 40. Maximum Leveled Power (dBm), Option 425 with 029, Combine Mode - Typical 47
Table 41. Maximum Power (dBm), All Ports, Option 425 with 029 (LFE Enabled), Combine Mode - Typical 47
Table 42. Maximum Leveled Power (dBm), Noise Mode[1], Options 425 with 029 - Typical 48
Table 43. Maximum Power (dBm), All Ports, Option 425 (LFE Enabled), Combine Mode - Typical 49
Table 44. Maximum Leveled Power (dBm), Option 22x 49
Table 45. Maximum Leveled Power (dBm), Options 22x, 422, or 423 with 029[1] 50
Table 46. Maximum Leveled Power (dBm), Options 22x or 42x with 029[1], Combine Mode-Typical 51
Table 47. Maximum Leveled Power (dBm), Noise Mode[1], Options 22x or 42x with 029[1] - Typical 52

Table 48. Maximum Power (dBm), All Ports – Option 425 and Option 425 with 029 (LFE Enabled). 53
Table 49. Typical Output Power Range of SRC3 on Rear Panel (dBm) - Option XSB[1] 53
Table 50. Power Level Accuracy (dB) at Nominal Power[1], All Options 54
Table 51. Power Level Accuracy (dB), All Ports, Option 425 and Option 425 with 029 (LFE Enabled) 54
Table 52. Power Level Linearity[1] (dB), All Options - Specification 55
Table 53. Power Level Linearity[1] (dB), All Options - Specification 55
Table 54. Power Level Linearity[1] (dB), Option 22x - Specification 55
Table 55. Power Level Linearity[1] (dB), All Ports, Option 425 and Option 425 with 029 (LFE Enabled) 55
Table 56. Power Sweep Range (dB), Options 201 or 401 56
Table 57. Power Sweep Range (dB), Options 21x or 41x 57
Table 58. Power Sweep Range (dB), Options 22x, 422, or 423 58
Table 59. Power Sweep Range (dB), Option 22x 59
Table 60. Power Sweep Range (dB), Options 22x, 422, or 423 with 029[1] 60
Table 61. Power Sweep Range (dB), Option 425 61
Table 62. Power Sweep Range (dB), Option 425 with 029 62
Table 63. Power Sweep Range (dB) –Option 425 and Option 425 with 029 (LFE Enabled) 62
Table 64. Nominal Power (Preset Power, dBm) 63
Table 65. Power Resolution and Maximum/Minimum Settable Power, All Ports[1] 63
Table 66. 2nd and 3rd Harmonics at Max Specified Power (dBc), All Options - Typical 63
Table 67. 2nd and 3rd Harmonics at Max Specified Power (dBc), All Ports, Option 425 (LFE Enabled) - Typical 64
Table 68. Non-Harmonic Spurs[1] at Nominal Power (dBc), All Options – Typical 64
Tracking Spurs (Linear Frequency Scale) 65
Tracking Spurs (Logarithmic Frequency Scale) 65
Table 69. Phase Noise (dBc/Hz), All Options, with UNY, Port 1, 3, Src2Out1 - Typical 66
Table 70. Phase Noise (dBc/Hz), All Options, with UNY, Port 2, 4, Src2Out2 - Typical 66
Table 71. Phase Noise (dBc/Hz), All Options, with UNY, All Ports – Supplemental Performance Data 66
Phase Noise with Option UNY 67
Phase Noise with Option UNY (Supplemental Performance Data) 67
Table 72. Phase Noise (dBc/Hz), Option 425, 425 with 029, and with UNY, All Ports (LFE Enabled) - Typical 68
Table 73. Phase Noise (dBc/Hz), All Options, without UNY, All Ports - Typical 68
Table 74. Phase Noise (dBc/Hz), All Options, without UNY, All Ports – Supplemental Performance Data 68
Phase Noise, CW 10 GHz, with Option UNY and without Option UNY 68
Test Port Input 69
Table 75. Noise Floor[1] (dBm) @ 10 Hz IFBW, All Options, All Ports 69

Table 76. Test Port Noise Floor (dBm) @ 10 Hz IFBW Option 425 (LFE Enabled) 69
Table 77. 0.1 dB Compression, All Options, All Ports - Typical 70
Table 78. 0.1 dB Compression, All Ports, Option 425 (LFE Enabled) - Typical 70
Table 79. Compression, All Ports, Option 425 (LFE Enabled)- Specification 70
Table 80. Compression, All Ports - Specification 71
Table 81. Trace Noise[1] Magnitude (dB rms), All Options, All Ports 71
Table 82. Trace Noise[1] Magnitude (dB rms), All Ports, Option 425 (LFE Enabled) 72
Table 83. Trace Noise[1] Phase (deg rms), All Options, All Ports 72
Table 84. Trace Noise[1] Phase (deg rms), All Ports, Option 425 (LFE Enabled) 72
Table 85. Reference Level - Specification 73
Table 86. Stability[1] - Typical 73
Table 87. Stability[1], Option 425 (LFE Enabled) - Typical 73
Table 88. Damage Input Level - Specification 74
Noise Receiver Input (Option 029 only) 75
Table 89. Noise Receiver Bandwidth 75
Table 90. Receiver Noise Figure (dB), Port 2, at 4 MHz BW, High Gain Setting 75
Table 91. Receiver Noise Figure (dB), Port 2, @ 4 MHz BW, High Gain Setting, Option 425 with 029 75
Table 92. Noise Figure Trace Noise[1] (dB rms) at 4 MHz BW, All Gain Settings 75
Table 93. Noise Receiver Linearity (dB) at 4 MHz BW - Specification 76
Table 94. Noise Receiver Input Range - Specification 76
Table 95. Noise Receiver Input Range, Option 425 with 029 - Specification 76
Phase Noise Measurement Performance (with S930317B phase noise measurement application) 77
Table 96. Absolute Phase Noise Sensitivity (dBc/Hz), in Best mode - Supplemental Performance Data 77
Table 97. Absolute AM Noise Sensitivity (dBc/Hz), in Best mode - Supplemental Performance Data 77
Absolute Phase Noise Sensitivity (dBc/Hz) - Supplemental Performance Data 78
Single-Channel Residual Noise Measurement 79
Table 98. Single-Channel Residual Phase Noise Sensitivity (dBc/Hz), with Option UNY in Best mode - Supplemental Performance Data 79
Table 99. Single-Channel Residual AM Noise Sensitivity (dBc/Hz), with Option UNY in Best mode - Supplemental Performance Data 79
Single-Channel Residual Phase Noise Sensitivity (dBc/Hz) - Supplemental Performance Data 80
Table 100. Single-Channel Residual Phase Noise Sensitivity (dBc/Hz), without Option UNY in Best mode - Supplemental Performance Data 81
Table 101. Single-Channel Residual AM Noise Sensitivity (dBc/Hz), without Option UNY in Best mode - Supplemental Performance Data 81
2-Channel Residual Noise Measurement for Non-Frequency Converting Devices 82

Table 102. 2-Channel Residual Phase Noise Sensitivity (dBc/Hz) in Best mode - Supplemental Performance Data 82
Table 103. 2-Channel Residual AM Noise Sensitivity (dBc/Hz) in Best mode - Supplemental Performance Data 82
2-Channel Residual Phase Noise Sensitivity (dBc/Hz) - Supplemental Performance Data 83
Dynamic Accuracy 84
Table 104. Dynamic Accuracy - Specification 84
Dynamic Accuracy, 900 Hz (LFE Enabled) - Specification 84
Dynamic Accuracy, 10 MHz (LFE Enabled) - Specification 84
Dynamic Accuracy, 100 MHz (LFE Enabled) - Specification 85
Dynamic Accuracy, 10 MHz 85
Dynamic Accuracy, 50 MHz 85
Dynamic Accuracy, 500 MHz 86
Dynamic Accuracy, 1 GHz 86
Dynamic Accuracy, 2 GHz 86
Dynamic Accuracy, 10 GHz 87
Dynamic Accuracy, 20 GHz 87
Dynamic Accuracy, 30 GHz 87
Dynamic Accuracy, 43.5 GHz 88
Dynamic Accuracy, 50 GHz 88
Table 105. Test Port Input (Group Delay)[1] 89
General Information 90
Table 106. Miscellaneous Information 90
Table 107. Front Panel Information, All Options 90
Table 108. Rear Panel Information, All Options 91
Table 109. Analyzer Dimensions and Weight 94
Regulatory and Environmental Information 94
Measurement Throughput Summary 95
Table 110. Cycle Time (ms) for Measurement Completion, All Models, All Options - Typical 95
Table 111. N5244B Cycle Time (ms) for Full-Span Measurement Completion - Typical 95
Table 112. N5245B Cycle Time (ms) for Full-Span Measurement Completion - Typical 96
Table 113. Cycle Time vs. IF Bandwidth - Typical 96
Table 114. Cycle Time (ms) vs. Number of Points - Typical 97
Table 115. Data Transfer Time[1] (ms) - Typical 98
Table 116. Typical Cycle Time for Amplifier Noise Figure Measurement (Option 029 and S93029B) 99
Table 117. Typical Cycle Time for Amplifier Gain Compression Measurement (Option S93086B) 99
Table 118. Typical Cycle Time for Amplifier Swept Intermodulation Distortion Measurement (Option S93087B) 100

Table 119. Typical Cycle Time for Converter Noise Figure Measurement (Option 029 and S93029B) 100
Table 120. Typical Cycle Time for Converter Measurement with SMC + Phase (Option S93083B) 101
Table 121. Typical Cycle Time for Converter Gain Compression Measurement (Option S93086B) 101
Table 122. Typical Cycle Time for Converter Swept Intermodulation Distortion Measurement (Option S93087B) 102
Front-Panel Jumpers 103
Table 123. Measurement Receiver Inputs (dBm) - Typical 103
Table 124. Reference Receiver Inputs and Reference Source Outputs (dBm) - Typical 104
Table 125. Reference Receiver Inputs and Reference Source Outputs (dBm) - Typical 105
Table 126. Reference Receiver Inputs and Reference Source Outputs (dBm) - Typical 106
Table 127. Source Outputs (dBm) - Typical 107
Table 128. Source Outputs (dBm) - Typical 108
Table 129. Coupler Inputs (dB) - Typical 108
Table 130. Damage Level - Typical 109
Test Set Block Diagrams 110

This is a complete list of the technical specifications for the N5244B and N5245B with the following options (see block diagrams at the end of this document):

Option 029, adds hardware and firmware for high-accuracy noise figure measurements. It requires one of Option 22x or 42x.

Option 201, 2-port standard test set (includes six front-panel access loops) and power range.

Option 217, 2-port standard test set (includes six front-panel access loops), power range, and source and receiver attenuators (extended power range).

Option 219, 2-port standard test set (includes six front-panel access loops), power range, source and receiver attenuators (extended power range), and bias-tees.

Option 222, 2-port standard test set (includes six front-panel access loops), power range, source and receiver attenuators (extended power range), internal second source, a combiner, and mechanical switches to the 2-port analyzer.

Option 224, 2-port standard test set (includes six front-panel access loops), power range, source and receiver attenuators (extended power range), internal second source, a combiner, mechanical switches to the 2-port analyzer, and bias tees.

Option 401, 4-port standard test set (includes twelve front-panel access loops), power range, and an internal second source (Option 080 recommended).

Option 417, 4-port standard test set (includes twelve front-panel access loops), power range, internal second source (Option 080 recommended), and source and receiver attenuators (extended power range).

Option 419, 4-port standard test set (includes twelve front-panel access loops), power range, internal second source (Option 080 recommended), and source and receiver attenuators (extended power range), and bias-tees.

Option 422, 4-port standard test set (includes six front-panel access loops), power range, source and receiver attenuators (extended power range), internal second source, a combiner, and mechanical switches to the 4-port analyzer.

Option 423, 4-port standard test set (includes six front-panel access loops), power range, source and receiver attenuators (extended power range), internal second source, a combiner, mechanical switches to the 4-port analyzer, and bias tees.

Option 425, (N5245B only) 4-port configurable test set, source and receiver attenuators, internal second source, combiner, mechanical switches, and low frequency extension (LFE).

Notes

The Corrected System Performance with Cal Kits and Dynamic Accuracy Charts apply ONLY to N5244B/45B models with serial numbers starting with MY5244/45, SG5244/45, and US5244/45, and above. This document provides technical specifications for the 85056A calibration kit, and the N4693A 2-Port ECal module. Please download our free Uncertainty Calculator from http://www.keysight.com/find/na_calculator to generate the curves for your calibration kit and PNA setup.

For all tables in this document, the specified performance at the exact frequency of a break is the degraded value of the two specifications at that frequency.

Definitions

All specifications and characteristics apply over a 25 °C ±5 °C range (unless otherwise stated) and 90 minutes after the instrument has been turned on.

Specification (spec.): Warranted performance. Specifications include guardbands to account for the expected statistical performance distribution, measurement uncertainties, and changes in performance due to environmental conditions.

Characteristic (char.): A performance parameter that the product is expected to meet before it leaves the factory, but that is not verified in the field and is not covered by the product warranty. A characteristic includes the same guardbands as a specification.

Typical (typ.): Expected performance of an average unit which does not include guardbands. It is not covered by the product warranty.

Nominal (nom.): A general, descriptive term that does not imply a level of performance. It is not covered by the product warranty.

Supplemental performance data (SPD): A performance parameter that is tested on a minimal set of products during design validation. It does not include guardbands, and is not covered by the product warranty.

Calibration: The process of measuring known standards to characterize a network analyzer's systematic (repeatable) errors.

Corrected (residual): Indicates performance after error correction (calibration). It is determined by the quality of calibration standards and how well "known" they are, plus system repeatability, stability, and noise.

Uncorrected (raw): Indicates instrument performance without error correction. The uncorrected performance affects the stability of a calibration.

Standard: When referring to the analyzer, this includes no options unless noted otherwise.

Standard and LFE measurements: With option 425, which adds low frequency extension (LFE) hardware, the LFE measurement range overlaps with the standard measurement range from 10 MHz to 100 MHz. With LFE Enabled, measurements from 500 Hz to 100 MHz use LFE hardware. With LFE Disabled, measurements from 10 MHz to 100 MHz use standard hardware. To measure below 10 MHz, LFE must be enabled. All measurements above 100 MHz use standard hardware, regardless of the LFE Enabled/Disabled setting.

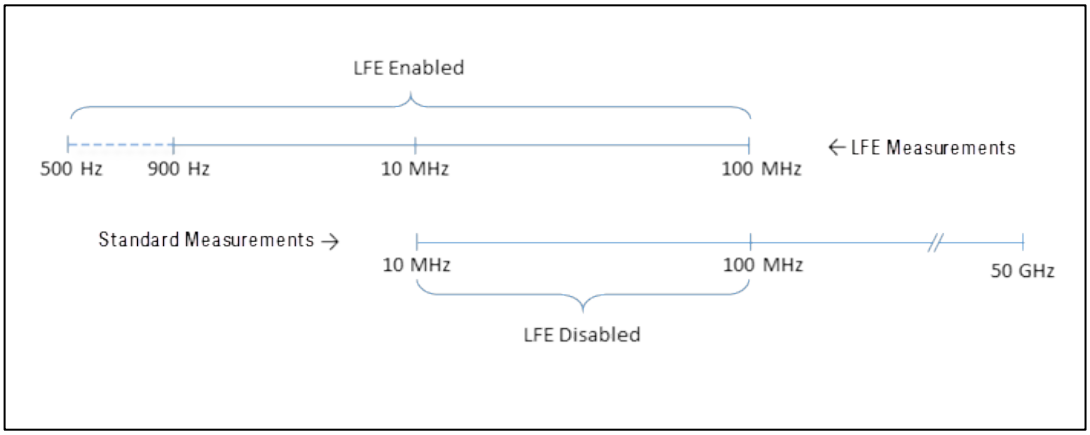

Dynamic Range

The specifications in this section apply for measurements made with the N5244B and N5245B analyzer with the following conditions:

- 10 Hz IF bandwidth
- No averaging applied to data
- Isolation calibration with an averaging factor of 8
- Source in filtered mode where applicable

System Dynamic Range is defined as the measured source maximum output power (A) minus the measured noise floor (B).

Extended Dynamic Range at Direct Access Input is defined as the system dynamic range (typical) less the nominal loss associated with the test port coupler.

Receiver Dynamic Range is defined as the typical test port 0.1 dB compression (C) minus the typical noise floor (D).

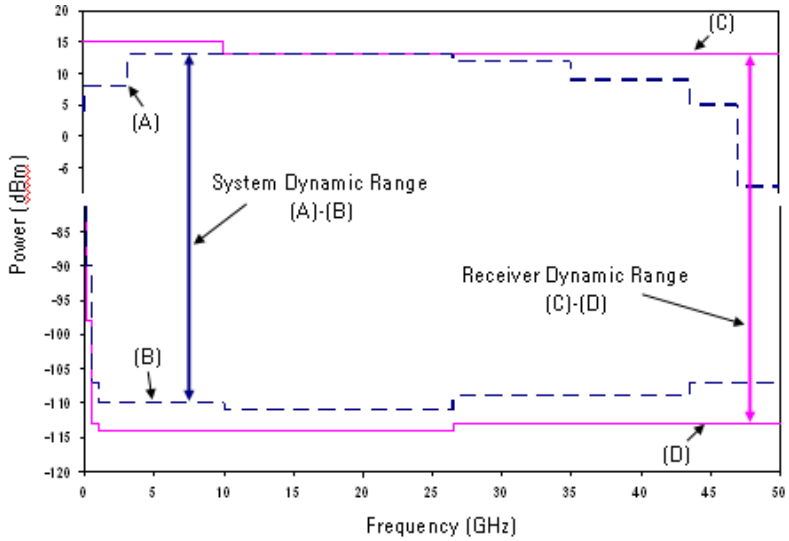

System Dynamic Range

Table 1. System Dynamic Range at Test Port (dB), Options 201 or 401

Description	Specification[3]		Typical	
	Ports[1, 2] 1, 3	Ports[1] 2, 4	Ports[1, 2] 1, 3	Ports[1] 2, 4
10 MHz to 50 MHz	91	89	97	97
50 MHz to 100 MHz	107	106	113	114
100 MHz to 500 MHz	113	113	125	127
500 MHz to 1 GHz	130	131	136	138
1 GHz to 2 GHz	132	134	139	141
2 GHz to 3.2 GHz	129	132	136	140
3.2 GHz to 10 GHz	133	131	140	138
10 GHz to 16 GHz	130	128	138	136
16 GHz to 20 GHz	129	129	136	137
20 GHz to 26.5 GHz	130	130	138	138
26.5 GHz to 30 GHz	125	126	133	133
30 GHz to 32 GHz	126	127	134	134
32 GHz to 35 GHz	127	128	134	135
35 GHz to 40 GHz	123	122	131	130
40 GHz to 43.5 GHz	122	122	130	130
43.5 GHz to 47 GHz	122	122	131	131
47 GHz to 50 GHz	112	113	124	124

[1] Either port can be used as the source port. Any other port can be used as the receiver port.
[2] System Dynamic Range measured in High Power Mode.
[3] Specification applies to new instruments. Test limit during recertification is defined by Maximum Leveled Power - Noise Floor.

Table 2. System Dynamic Range at Test Port (dB), Options 21x or 41x

Description	Specification[3]		Typical (dB)	
	Ports[1, 2] 1, 3	Ports[1] 2, 4	Ports[1, 2] 1, 3	Ports[1] 2, 4
10 MHz to 50 MHz	88	90	96	97
50 MHz to 100 MHz	106	106	113	113
100 MHz to 500 MHz	114	114	126	127
500 MHz to 1 GHz	128	130	135	137
1 GHz to 2 GHz	131	133	138	140
2 GHz to 3.2 GHz	125	131	133	138
3.2 GHz to 10 GHz	130	131	138	137
10 GHz to 16 GHz	129	129	138	137
16 GHz to 20 GHz	127	128	136	136
20 GHz to 26.5 GHz	129	129	137	137
26.5 GHz to 30 GHz	123	123	131	131
30 GHz to 32 GHz	122	123	131	131
32 GHz to 35 GHz	123	123	132	131
35 GHz to 40 GHz	115	117	125	126
40 GHz to 43.5 GHz	115	116	125	125
43.5 GHz to 47 GHz	115	116	125	126
47 GHz to 50 GHz	104	103	118	118

[1] Either port can be used as the source port. Any other port can be used as the receiver port.
[2] System Dynamic Range measured in High Power Mode.
[3] Specification applies to new instruments. Test limit during recertification is defined by Maximum Leveled Power - Noise Floor.

Table 3. System Dynamic Range at Test Port (dB), Option 22x

Description	Specification[2]		Typical (dB)	
	Source 2 Out 1[1]	Source 2 Out 2	Source 2 Out 1[1]	Source 2 Out 2
10 MHz to 50 MHz	90	89	97	97
50 MHz to 100 MHz	106	106	113	114
100 MHz to 500 MHz	112	113	125	126
500 MHz to 1 GHz	128	128	135	137
1 GHz to 2 GHz	132	135	139	142
2 GHz to 3.2 GHz	129	132	136	140
3.2 GHz to 10 GHz	133	133	140	141
10 GHz to 16 GHz	134	132	141	140
16 GHz to 20 GHz	132	132	139	140
20 GHz to 26.5 GHz	134	135	141	142
26.5 GHz to 30 GHz	128	129	136	136
30 GHz to 32 GHz	129	129	137	137
32 GHz to 35 GHz	130	130	137	137
35 GHz to 40 GHz	125	127	133	134
40 GHz to 43.5 GHz	123	126	132	134
43.5 GHz to 47 GHz	124	125	133	134
47 GHz to 50 GHz	116	118	127	129

[1] System Dynamic Range measured in High Power Mode.
[2] Specification applies to new instruments. Test limit during recertification is defined by Maximum Leveled Power - Noise Floor.

Table 4. System Dynamic Range at Test Port (dB), Options 22x, 422, or 423

Description	Specification[3]		Typical			
	Ports[1, 2] 1, 3	Ports[1] 2, 4	Ports[1, 2] 1, 3	Ports[1] 2, 4	Source 1 Port 1 Combine Mode	Source 2 Port 1 Combine Mode
10 MHz to 50 MHz	90	89	97	97	82	83
50 MHz to 100 MHz	107	106	113	114	97	97
100 MHz to 500 MHz	114	114	126	127	104	104
500 MHz to 1 GHz	129	130	135	137	118	118
1 GHz to 2 GHz	131	132	138	140	120	120
2 GHz to 3.2 GHz	127	130	134	138	120	121
3.2 GHz to 10 GHz	132	130	138	136	124	123
10 GHz to 16 GHz	131	129	138	136	121	121
16 GHz to 20 GHz	128	128	136	136	117	117
20 GHz to 26.5 GHz	129	129	136	136	117	117
26.5 GHz to 30 GHz	124	123	131	131	114	113
30 GHz to 32 GHz	123	123	130	130	114	113
32 GHz to 35 GHz	124	124	131	131	114	113
35 GHz to 40 GHz	119	118	126	126	110	108
40 GHz to 43.5 GHz	119	118	126	126	110	108
43.5 GHz to 47 GHz	117	118	125	126	107	103
47 GHz to 50 GHz	109	107	118	118	96	92

[1] Either port can be used as the source port. Any other port can be used as the receiver port.
[2] System Dynamic Range measured in High Power Mode.
[3] Specification applies to new instruments. Test limit during recertification is defined by Maximum Leveled Power - Noise Floor.

Table 5. System Dynamic Range at Test Port (dB), Options (22x, 422, or 423) with 029[1]

Description	Specification[3]		Typical			
	Port 1 [2]	Port 2	Port 1 [2]	Port 2	Source 1 Port 1 Combine Mode	Source 2 Port 1 Combine Mode
10 MHz to 50 MHz	91	91	97	98	80	81
50 MHz to 100 MHz	108	108	114	115	95	95
100 MHz to 500 MHz	115	116	126	128	102	102
500 MHz to 1 GHz	129	131	135	138	116	116
1 GHz to 2 GHz	131	133	138	140	118	118
2 GHz to 3.2 GHz	127	132	134	139	118	118
3.2 GHz to 10 GHz	131	130	137	137	122	121
10 GHz to 16 GHz	130	128	137	136	118	118
16 GHz to 20 GHz	126	127	134	135	116	116
20 GHz to 26.5 GHz	128	129	135	135	116	116
26.5 GHz to 30 GHz	122	122	129	129	114	113
30 GHz to 32 GHz	122	122	129	129	114	113
32 GHz to 35 GHz	123	123	129	130	114	113
35 GHz to 40 GHz	116	117	124	124	109	108
40 GHz to 43.5 GHz	115	116	123	124	109	108
43.5 GHz to 47 GHz	115	115	123	123	105	103
47 GHz to 50 GHz	106	104	116	116	93	89

[1] Option 029 affects system dynamic range with port 1 or port 2 as the source port. Refer to Table 3 and Table 4 for the system dynamic range with port 3 or port 4 as the source port. Port 1 impedance tuner switch is in bypass position and port 2 noise receiver switch is in normal position.
[2] System Dynamic Range measured in High Power Mode.
[3] Specification applies to new instruments.Test limit during recertification is defined by Maximum Leveled Power - Noise Floor.

Table 6. System Dynamic Range at Test Port (dB), Option 425

Description	Specification[4]		Typical			
	Ports [2, 3] 1, 3	Ports[3] 2, 4	Ports [2, 3] 1, 3	Ports[3] 2, 4	Source 1 Port 1 Combine Mode	Source 2 Port 1 Combine Mode
10 MHz to 50 MHz[1]	84	82	91	90	75	75
50 MHz to 100 MHz[1]	104	103	110	110	92	92
100 MHz to 500 MHz	110	110	122	124	99	99
500 MHz to 1 GHz	126	128	133	135	113	113
1 GHz to 2 GHz	131	132	138	140	118	118
2 GHz to 3.2 GHz	127	130	134	138	118	119
3.2 GHz to 10 GHz	130	128	137	135	122	121
10 GHz to 16 GHz	129	126	137	135	119	119
16 GHz to 20 GHz	126	126	134	135	116	116
20 GHz to 26.5 GHz	128	127	136	135	116	116
26.5 GHz to 30 GHz	122	121	130	129	112	111
30 GHz to 32 GHz	121	123	130	130	112	111
32 GHz to 35 GHz	123	124	131	131	112	111
35 GHz to 40 GHz	117	117	125	126	111	111
40 GHz to 43.5 GHz	117	117	126	126	111	111
43.5 GHz to 47 GHz	114	117	124	126	106	106
47 GHz to 50 GHz	105	108	117	119	95	95

[1] With Option 425 installed and LFE disabled, applied to frequencies ≤ 100 MHz. Above 100 MHz, performance is the same for both LFE enabled or disabled. For LFE enabled performance ≤ 100 MHz, see Table 7.
[2] System Dynamic Range measured in High Power Mode.
[3] Either port can be used as the source port. Any other port can be used as the receiver port.
[4] Specification applies to new instruments. Test limit during recertification is defined by Maximum Leveled Power - Noise Floor.

Table 7. System Dynamic Range at Test Port (dB), Option 425 (LFE Enabled)

Description	Specification[1]		Typical	
	Ports 1, 3	Ports 2, 4	Ports 1, 3	Ports 2, 4
500 Hz to 900 Hz	--	--	105	105
900 Hz to 1 kHz	100	102	109	110
1 kHz to 10 kHz	103	105	110	111
10 kHz to 100 kHz	113	115	120	121
100 kHz to 1 MHz	120	121	124	125
1 MHz to 5 MHz	121	122	126	127
5 MHz to 10 MHz	112	114	118	119
10 MHz to 50 MHz	110	112	116	117
50 MHz to 100 MHz	110	112	116	117

[1] Specification applies to new instruments. Test limit during recertification is defined by Maximum Leveled Power - Noise Floor.

Table 8. System Dynamic Range at Test Port (dB), Option 425 (LFE Enabled), Combine Mode - Typical

Description	Source 1 Port 1	Source 2 Port 1
500 Hz to 900 Hz	99	98
900 Hz to 1 kHz	103	102
1 kHz to 10 kHz	104	103
10 kHz to 100 kHz	104	103
100 kHz to 1 MHz	118	118
1 MHz to 5 MHz	119	119
5 MHz to 10 MHz	111	110
10 MHz to 50 MHz	111	110
50 MHz to 100 MHz	111	110

Table 9. System Dynamic Range at Test Port (dB), Option 425 with 029

Description	Specification[3]		Typical			
	Port[2] 1	Port 2	Port[2,] 1	Port 2	Source 1 Port 1 Combine Mode	Source 2 Port 1 Combine Mode
10 MHz to 50 MHz[1]	83	82	90	90	74	74
50 MHz to 100 MHz[1]	103	103	109	110	91	91
100 MHz to 500 MHz	109	110	121	124	98	98
500 MHz to 1 GHz	126	127	133	134	113	113
1 GHz to 2 GHz	131	131	138	139	118	118
2 GHz to 3.2 GHz	127	129	134	137	118	119
3.2 GHz to 10 GHz	130	127	137	134	122	121
10 GHz to 16 GHz	127	125	135	134	117	117
16 GHz to 20 GHz	124	125	132	134	114	114
20 GHz to 26.5 GHz	126	126	134	134	114	114
26.5 GHz to 30 GHz	120	120	128	128	110	109
30 GHz to 32 GHz	119	122	128	129	110	109
32 GHz to 35 GHz	121	123	129	130	110	109
35 GHz to 40 GHz	115	116	123	125	109	109
40 GHz to 43.5 GHz	115	116	124	125	109	109
43.5 GHz to 47 GHz	112	116	122	125	104	104
47 GHz to 50 GHz	103	107	115	118	93	93

[1] With Option 425 installed and LFE disabled, applied to frequencies ≤ 100 MHz. Above 100 MHz, performance is the same for both LFE enabled or disabled. For LFE enabled performance ≤ 100 MHz, see Table 7.
[2] System Dynamic Range measured in High Power Mode.
[3] Specification applies to new instruments. Test limit during recertification is defined by Maximum Leveled Power - Noise Floor.

Extended Dynamic Range

Table 10. Extended Dynamic Range at Direct Receiver Access Input (dB) - Typical

Description	Options 201, 401		Options 21x, 41x	
	Ports[1] 1, 3	Ports[1] 2, 4	Ports[1] 1, 3	Ports[1] 2, 4
10 MHz to 50 MHz	141	141	140	141
50 MHz to 100 MHz	143	144	143	143
100 MHz to 500 MHz	145	147	146	147
500 MHz to 1 GHz	156	158	155	157
1 GHz to 2 GHz	154	156	153	155
2 GHz to 3.2 GHz	151	155	148	153
3.2 GHz to 10 GHz	155	153	153	152
10 GHz to 16 GHz	153	151	153	152
16 GHz to 20 GHz	151	152	151	151
20 GHz to 26.5 GHz	152	152	151	151
26.5 GHz to 30 GHz	147	147	145	145
30 GHz to 32 GHz	148	148	145	145
32 GHz to 35 GHz	148	149	146	145
35 GHz to 40 GHz	145	144	139	140
40 GHz to 43.5 GHz	142	142	137	137
43.5 GHz to 47 GHz	143	143	137	138
47 GHz to 50 GHz	136	136	130	130

[1]Either port can be used as the source port. Any other port can be used as the receiver port.

Table 11. Extended Dynamic Range at Direct Receiver Access Input (dB) – Typical

Description	Options 22x or 42x (except 425)				Options 22x or 42x (except 425)	
	Source 2 Out 1	Source2 Out 2	Ports[1] 1, 3	Ports[1]2, 4	Source 1 Port 1 Combine Mode	Source 2 Port 1 Combine Mode
10 MHz to 50 MHz	141	141	141	141	117	118
50 MHz to 100 MHz	143	144	143	144	117	117
100 MHz to 500 MHz	145	146	146	147	124	124
500 MHz to 1 GHz	155	157	155	157	139	139
1 GHz to 2 GHz	154	157	153	155	140	140
2 GHz to 3.2 GHz	151	155	149	153	132	133
3.2 GHz to 10 GHz	155	156	153	151	136	135
10 GHz to 16 GHz	156	155	153	151	133	133
16 GHz to 20 GHz	154	155	151	151	129	129
20 GHz to 26.5 GHz	155	156	150	150	129	129
26.5 GHz to 30 GHz	150	150	145	145	124	123
30 GHz to 32 GHz	151	151	144	144	124	123
32 GHz to 35 GHz	151	151	145	145	124	123
35 GHz to 40 GHz	147	148	140	140	120	118
40 GHz to 43.5 GHz	144	146	138	138	120	118
43.5 GHz to 47 GHz	145	146	137	138	117	113
47 GHz to 50 GHz	139	141	130	130	106	102

[1]Either port can be used as the source port. Any other port can be used as the receiver port.

Table 12. Extended Dynamic Range at Direct Receiver Input (dB), Options 422 or 423 with 029[1] - Typical

Description	Options 22x or 42x with 029[1]		Options 22x or 42x with 029[1]	
	Port 1	Port 2	Source 1 Port 1 Combine Mode	Source 2 Port 1 Combine Mode
10 MHz to 50 MHz	141	142	115	116
50 MHz to 100 MHz	144	145	115	115
100 MHz to 500 MHz	146	148	122	122
500 MHz to 1 GHz	155	158	137	137
1 GHz to 2 GHz	153	155	138	138
2 GHz to 3.2 GHz	149	154	130	130
3.2 GHz to 10 GHz	152	152	134	133
10 GHz to 16 GHz	152	151	130	130
16 GHz to 20 GHz	149	150	128	128
20 GHz to 26.5 GHz	149	149	128	128
26.5 GHz to 30 GHz	143	143	124	123
30 GHz to 32 GHz	143	143	124	123
32 GHz to 35 GHz	143	144	124	123
35 GHz to 40 GHz	138	138	119	118
40 GHz to 43.5 GHz	135	136	119	118
43.5 GHz to 47 GHz	135	135	115	113
47 GHz to 50 GHz	128	128	103	99

[1] Option 029 affects system dynamic range with port 1 or port 2 as the source port. Refer to Table 11 for the extended dynamic range with port 3 or port 4 as the source port. Port 1 impedance tuner switch is in bypass position and port 2 noise receiver switch is in normal position.

Table 13. Extended Dynamic Range at Direct Receiver Access Input (dB), Option 425 - Typical

Description	Option 425	
	Ports[1] 1, 3	Ports[1] 2, 4
10 MHz to 50 MHz	135	134
50 MHz to 100 MHz	140	140
100 MHz to 500 MHz	142	144
500 MHz to 1 GHz	153	155
1 GHz to 2 GHz	153	155
2 GHz to 3.2 GHz	149	153
3.2 GHz to 10 GHz	152	150
10 GHz to 16 GHz	152	150
16 GHz to 20 GHz	149	150
20 GHz to 26.5 GHz	150	149
26.5 GHz to 30 GHz	144	143
30 GHz to 32 GHz	144	144
32 GHz to 35 GHz	145	145
35 GHz to 40 GHz	139	140
40 GHz to 43.5 GHz	138	138
43.5 GHz to 47 GHz	136	138
47 GHz to 50 GHz	129	131

[1] Either port can be used as the source port. Any other port can be used as the receiver port.

Table 14. Extended Dynamic Range at Direct Receiver Access Input (dB), Option 425 with 029 - Typical

Description	Option 425 with 029	
	Port 1	Port 2
10 MHz to 50 MHz	134	134
50 MHz to 100 MHz	139	140
100 MHz to 500 MHz	141	144
500 MHz to 1 GHz	153	154
1 GHz to 2 GHz	153	154
2 GHz to 3.2 GHz	149	152
3.2 GHz to 10 GHz	152	149
10 GHz to 16 GHz	150	149
16 GHz to 20 GHz	147	149
20 GHz to 26.5 GHz	148	148
26.5 GHz to 30 GHz	142	142
30 GHz to 32 GHz	142	143
32 GHz to 35 GHz	143	144
35 GHz to 40 GHz	137	139
40 GHz to 43.5 GHz	136	137
43.5 GHz to 47 GHz	132	137
47 GHz to 50 GHz	127	130

Receiver Dynamic Range

Table 15. Receiver Dynamic Range (dB), All Options

Description	Typical
10 MHz to 50 MHz[1]	91
50 MHz to 100 MHz[1]	106
100 MHz to 500 MHz	113
500 MHz to 1 GHz	127
1 GHz to 2 GHz	129
2 GHz to 3.2 GHz	129
3.2 GHz to 10 GHz	129
10 GHz to 16 GHz	127
16 GHz to 20 GHz	127
20 GHz to 26.5 GHz	127
26.5 GHz to 30 GHz	126
30 GHz to 32 GHz	126
32 GHz to 35 GHz	126
35 GHz to 40 GHz	126
40 GHz to 43.5 GHz	126
43.5 GHz to 47 GHz	126
47 GHz to 50 GHz	126

[1] With Option 425 installed and LFE disabled, applied to frequencies ≤ 100 MHz. Above 100 MHz, performance is the same for both LFE enabled or disabled.

Table 16. Receiver Dynamic Range (dB), All Ports, Option 425 (LFE Enabled)

Description	Typical
500 Hz to 900 Hz	106
900 Hz to 1 kHz	109
1 kHz to 10 kHz	109
10 kHz to 100 kHz	118
100 kHz to 1 MHz	123
1 MHz to 5 MHz	123
5 MHz to 10 MHz	119
10 MHz to 50 MHz	120
50 MHz to 100 MHz	120

Corrected System Performance, All Options

Specification are valid for temperatures of 23°±3°C and < 1° C deviation from the calibration temperature. Specifications assume an N4697F flexible test port cable and a full 2-port calibration. For instruments with Option 029, the port 1 noise tuner switch is set to the bypass position, and the port 2 noise receiver switch is set to the normal position.

Note: For any Sii reflection measurement:

- Sjj = 0.

For any Sij transmission measurement:

- Sji = Sij when Sij ≤ 1
- Sji = 1/Sij when Sij > 1
- Skk = 0 for all k

Please download our free Uncertainty Calculator from http://www.keysight.com/find/na_calculator for specifications for other calibration kits and measurement setups.

Table 17. 85056A Calibration Kit

Description	Specification (dB)						
	10 MHz to 50 MHz	50 MHz to 2 GHz	2 GHz to 10 GHz	10 GHz to 20 GHz	20 GHz to 30 GHz	30 GHz to 40 GHz	40 GHz to 50 GHz
Directivity	41	41	41	41	37	37	35
Source Match	41	41	37	37	33	33	31
Load Match	41	41	41	41	37	37	35
Reflection Tracking							
Mag	±0.0015	±0.0015	±0.0082	±0.0082	±0.021	±0.021	±0.028
Phase (°)	±0.0093	±0.0093	±0.055	±0.055	±0.14	±0.14	±0.19
Transmission Tracking							
Mag	±0.061	±0.069	±0.089	±0.079	±0.15	±0.15	±0.20
Phase (°)	±0.41	±0.46	±0.59	±0.52	±1.0	±1.0	±1.4

Transmission Uncertainty

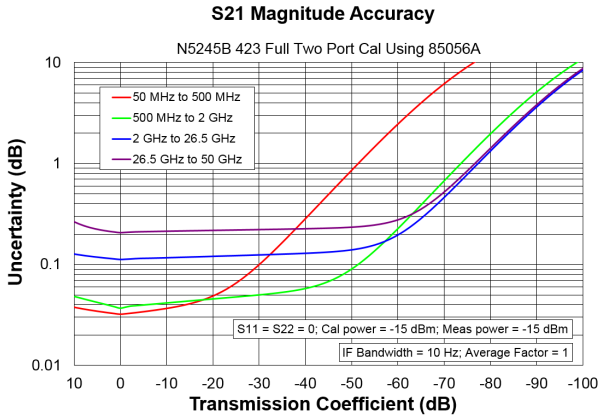

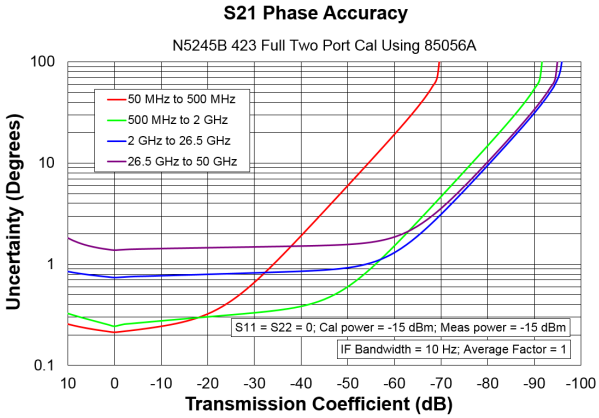

Reflection Uncertainty

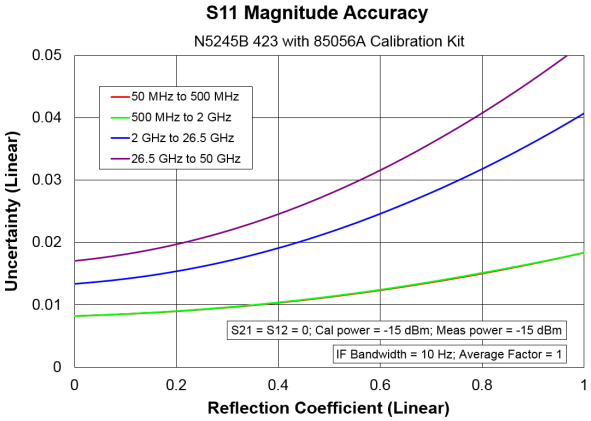

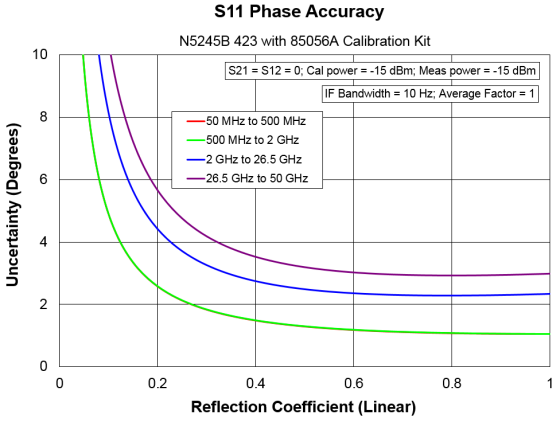

Table 18. 85056A Calibration Kit, LFE Enabled (Option 425)

Description	Specification (dB)				
	1 kHz to 10 kHz	10 kHz to 1 MHz	1 MHz to 5 MHz	5 MHz to 50 MHz	50 MHz to 100 MHz
Directivity	41	41	41	41	41
Source Match	41	41	41	41	41
Load Match	41	41	41	41	41
Reflection Tracking					
Mag	±0.0015	±0.0015	±0.0015	±0.0015	±0.0015
Phase (°)	±0.0093	±0.0093	±0.0093	±0.0093	±0.0093
Transmission Tracking					
Mag	±0.065	±0.021	±0.046	±0.061	±0.055
Phase (°)	±0.43	±0.14	±0.31	±0.41	±0.36

Transmission Uncertainty, Option 425

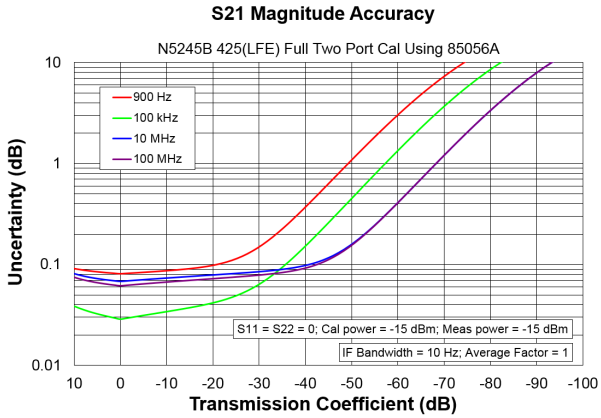

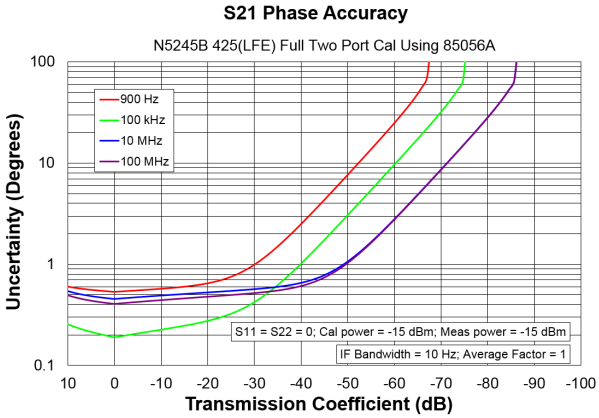

Reflection Uncertainty, Option 425

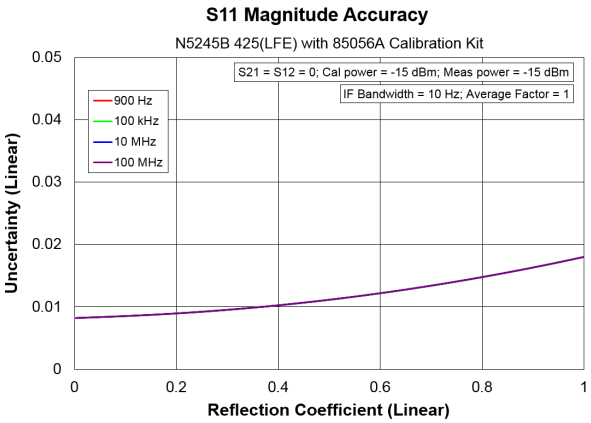

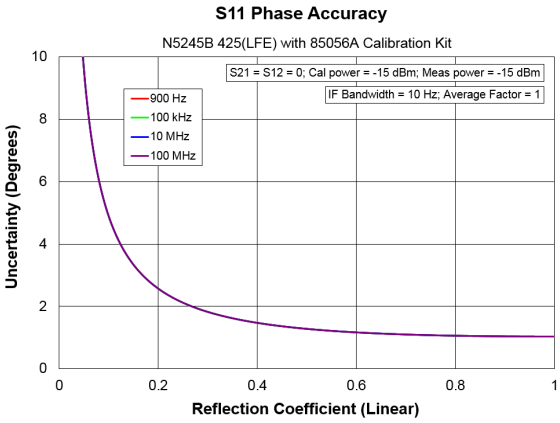

Table 19. 85056D Calibration Kit

Description	Specification (dB)						
	10 MHz to 50 MHz	50 MHz to 2 GHz	2 GHz to 10 GHz	10 GHz to 20 GHz	20 GHz to 30 GHz	30 GHz to 40 GHz	40 GHz to 50 GHz
Directivity	41	41	33	33	25	25	25
Source Match	39	39	30	30	23	23	23
Load Match	41	41	33	33	25	25	25
Reflection Tracking							
Mag	±0.0025	±0.0025	±0.029	±0.029	±0.080	±0.080	±0.075
Phase (°)	±0.016	±0.016	±0.19	±0.19	±0.53	±0.53	±0.50
Transmission Tracking							
Mag	±0.051	±0.030	±0.095	±0.12	±0.46	±0.46	±0.50
Phase (°)	±0.34	±0.20	±0.63	±0.79	±3.2	±3.2	±3.4

Transmission Uncertainty

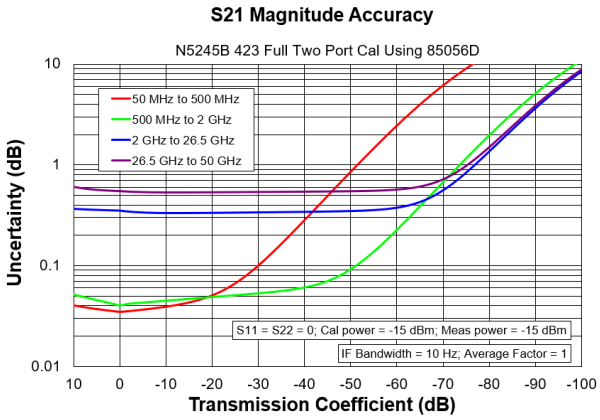

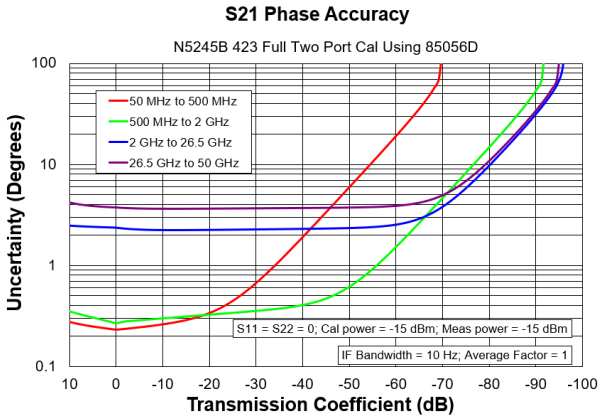

Reflection Uncertainty

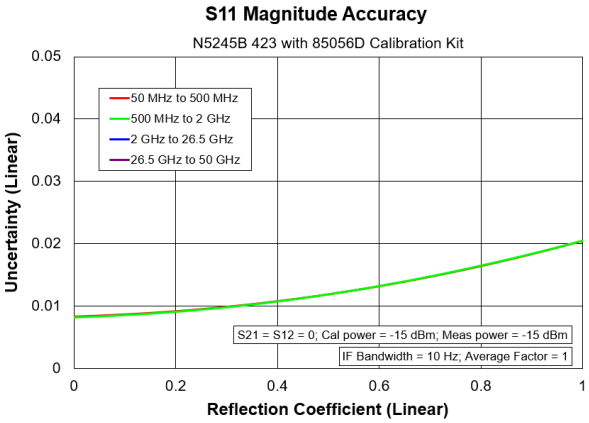

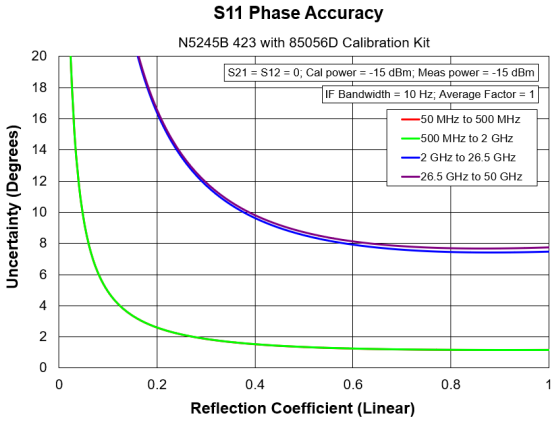

Table 20. N4693A Calibration Kit

Description	Specification (dB)						
	10 MHz to 50 MHz	50 MHz to 2 GHz	2 GHz to 10 GHz	10 GHz to 20 GHz	20 GHz to 30 GHz	30 GHz to 40 GHz	40 GHz to 50 GHz
Directivity	32	42	49	45	41	41	36
Source Match	25	44	42	37	35	35	32
Load Match	24	43	40	36	33	33	30
Reflection Tracking							
Mag	±0.051	±0.031	±0.041	±0.051	±0.061	±0.061	±0.081
Phase (°)	±0.34	±0.20	±0.27	±0.34	±0.40	±0.40	±0.54
Transmission Tracking							
Mag	±0.12	±0.041	±0.047	±0.064	±0.095	±0.095	±0.15
Phase (°)	±0.79	±0.28	±0.31	±0.43	±0.63	±0.63	±0.94

Transmission Uncertainty

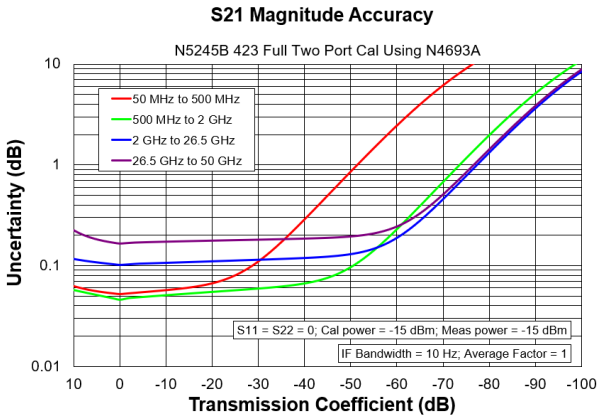

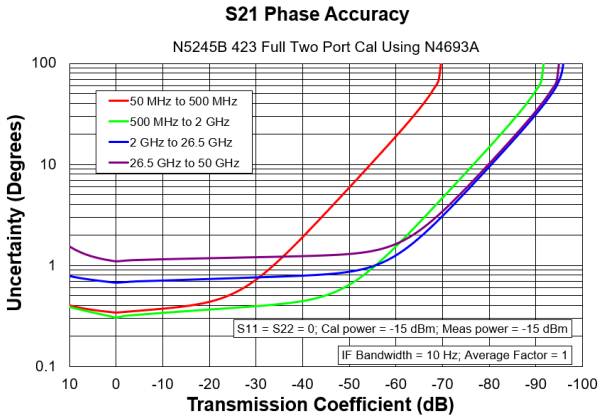

Reflection Uncertainty

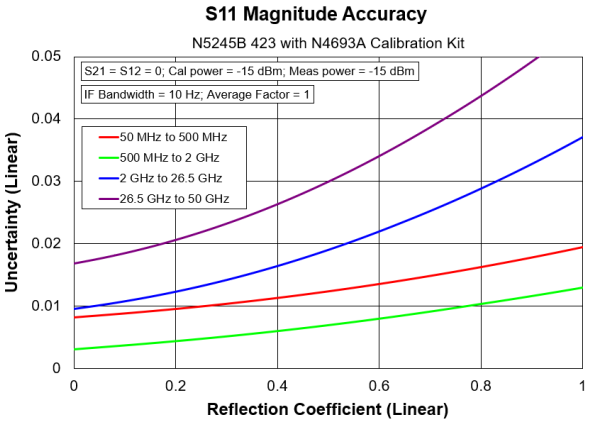

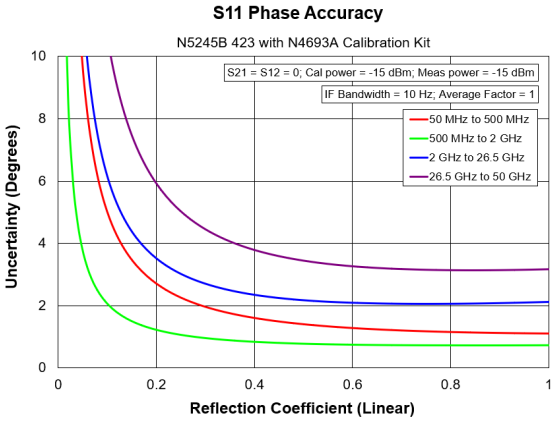

Table 21. N4693A Calibration Kit, LFE Enabled (Option 425)

Description	Specification (dB)				
	1 kHz to 10 kHz	10 kHz to 1 MHz	1 MHz to 5 MHz	5 MHz to 50 MHz	50 MHz to 100 MHz
Directivity	32	32	32	32	42
Source Match	25	25	25	25	44
Load Match	24	24	24	24	42
Reflection Tracking					
Mag	±0.051	±0.051	±0.051	±0.051	±0.031
Phase (°)	±0.34	±0.34	±0.34	±0.34	±0.20
Transmission Tracking					
Mag	±0.15	±0.075	±0.12	±0.14	±0.055
Phase (°)	±0.98	±0.50	±0.74	±0.91	±0.36

Transmission Uncertainty, Option 425

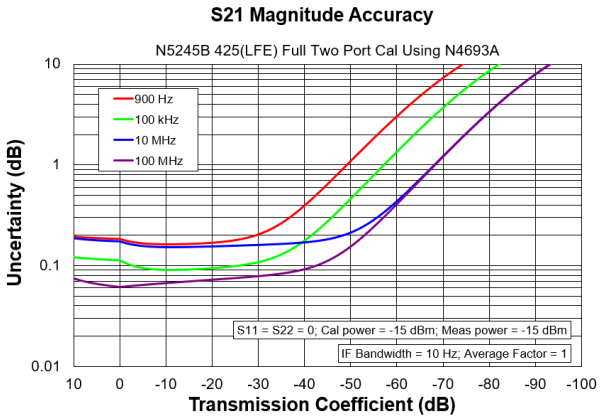

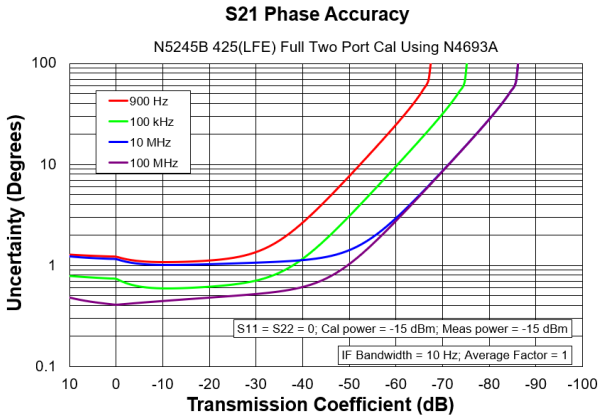

Reflection Uncertainty, Option 425

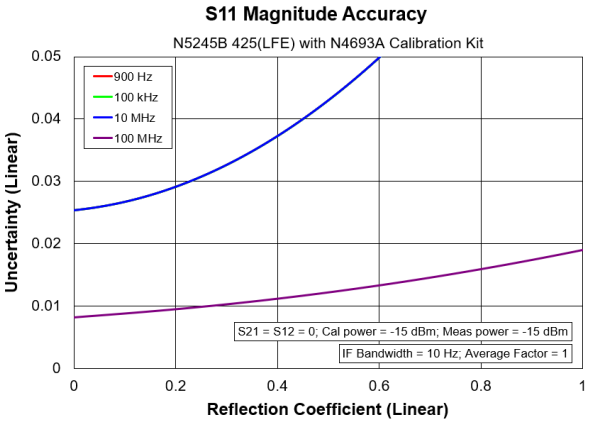

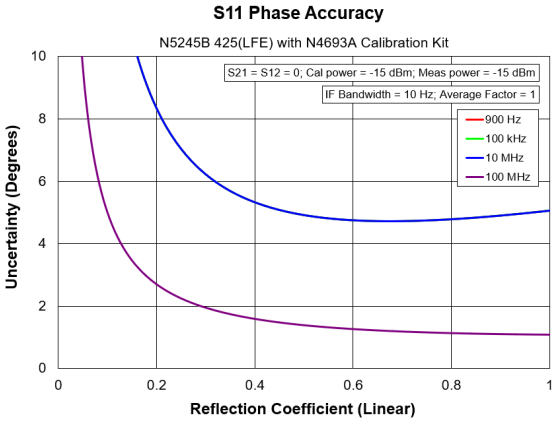

Table 22. N4693D Calibration Kit

Description	Specification (dB)						
	10 MHz to 50 MHz	50 MHz to 2 GHz	2 GHz to 10 GHz	10 GHz to 20 GHz	20 GHz to 30 GHz	30 GHz to 40 GHz	40 GHz to 50 GHz
Directivity	40	40	47	44	38	38	34
Source Match	38	44	42	37	35	35	32
Load Match	36	42	40	36	33	33	30
Reflection Tracking							
Mag	±0.051	±0.051	±0.041	±0.051	±0.061	±0.061	±0.081
Phase (°)	±0.34	±0.34	±0.27	±0.34	±0.40	±0.40	±0.54
Transmission Tracking							
Mag	±0.078	±0.064	±0.049	±0.066	±0.11	±0.11	±0.16
Phase (°)	±0.52	±0.43	±0.33	±0.44	±0.72	±0.72	±1.1

Transmission Uncertainty

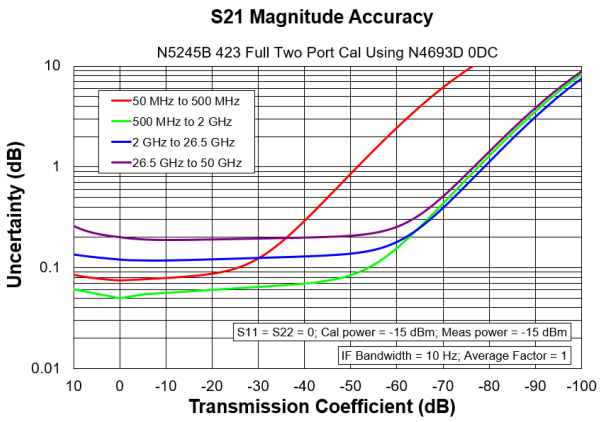

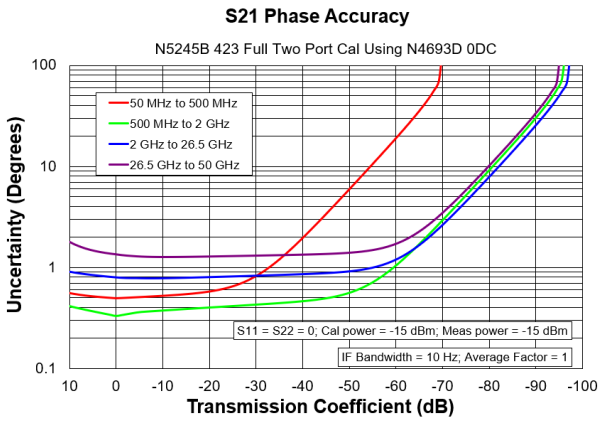

Reflection Uncertainty

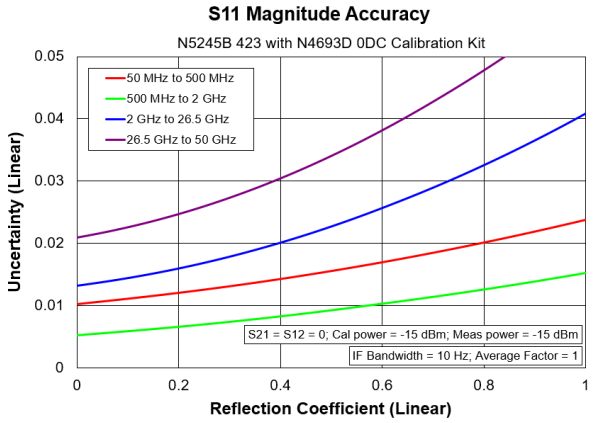

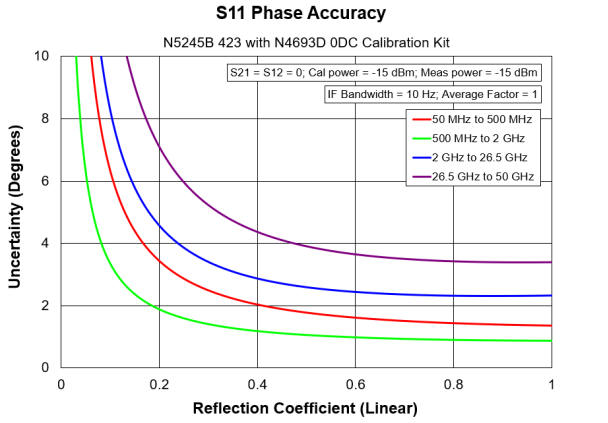

Table 23. N4693D Calibration Kit, LFE Enabled (Option 425)

Description	Specification (dB)				
	1 kHz to 10 kHz	10 kHz to 1 MHz	1 MHz to 5 MHz	5 MHz to 50 MHz	50 MHz to 100 MHz
Directivity	40	40	40	40	40
Source Match	38	38	38	38	44
Load Match	36	37	36	36	41
Reflection Tracking					
Mag	±0.051	±0.051	±0.051	±0.051	±0.051
Phase (°)	±0.34	±0.34	±0.34	±0.34	±0.34
Transmission Tracking					
Mag	±0.089	±0.060	±0.075	±0.085	±0.081
Phase (°)	±0.59	±0.40	±0.50	±0.56	±0.54

Transmission Uncertainty, Option 425

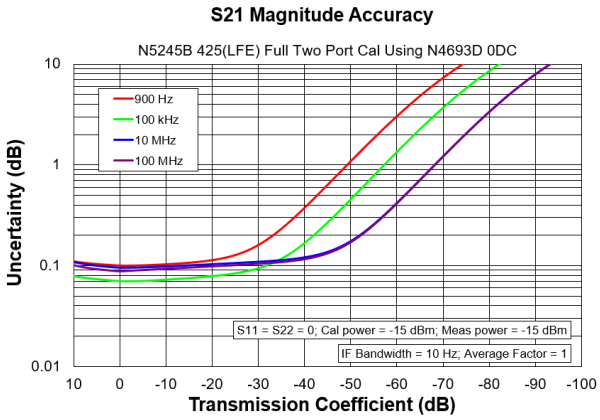

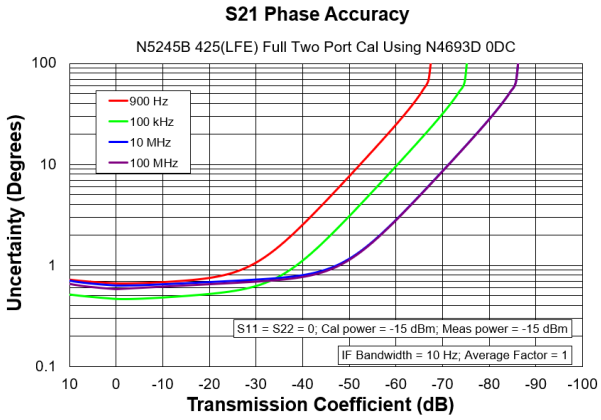

Reflection Uncertainty, Option 425

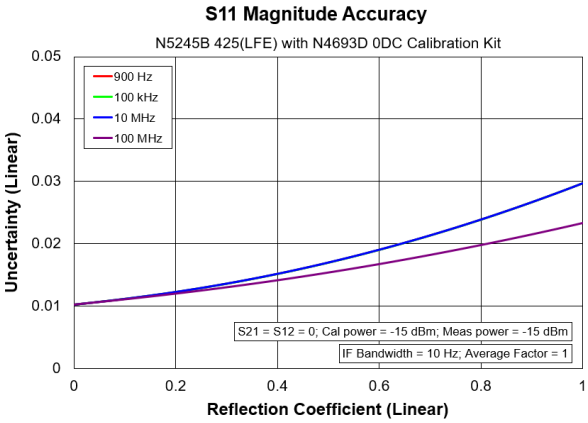

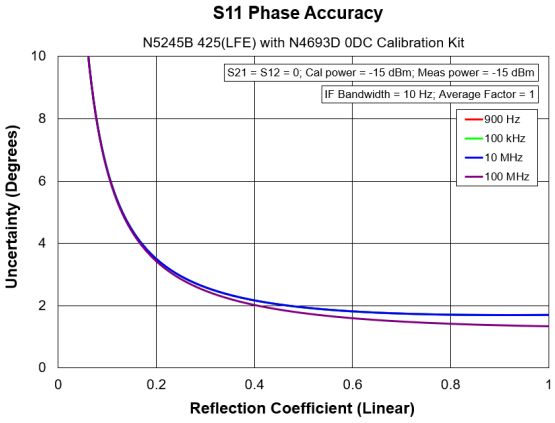

Uncorrected System Performance

Specifications apply to following conditions:

- Cable loss not included in Transmission Tracking.
- Crosstalk measurement conditions: normalized to a thru, measured with shorts on all ports, 10 Hz IF bandwidth, averaging factor of 8, alternate mode, source power set to the specified maximum power.
- With option 029, port 1 impedance tuner switch is in bypass position and port 2 noise receiver switch is in normal position unless specified. Refer to Options 201, 21x, 22x, 401, 41x, 42x for Option 029 Ports 3 and 4 performances.

Table 24. Directivity, All Options, All Ports (dB)

Description	Specification	Typical
10 MHz to 50 MHz[1]	18	21
50 MHz to 200 MHz[1]	22	27
200 MHz to 500 MHz	23	27
500 MHz to 3.2 GHz	23	30
3.2 GHz to 10 GHz	22	25
10 GHz to 13.5 GHz	18	23
13.5 GHz to 16 GHz	18	21
16 GHz to 20 GHz	18	20
20 GHz to 24 GHz	16	20
24 GHz to 35 GHz	16	22
35 GHz to 43.5 GHz	15	21
43.5 GHz to 47 GHz	15	21
47 GHz to 50 GHz	15	19

[1] With Option 425 installed and LFE disabled, applied to frequencies ≤ 100 MHz. Above 100 MHz, performance is the same for both LFE enabled or disabled. For LFE enabled performance ≤ 100 MHz, see Table 30 and Table 31.

Table 25. Source Match (dB)

Description	Specification		Typical	
	Options 201, 21x, 22x, 401, 41x, 42x	Option 029	Options 201, 21x, 22x, 401, 41x, 42x	Option 029
	All Ports	Ports 1, 2	All Ports	Ports 1, 2
10 MHz to 50 MHz[1]	10 (7)	10	13 (11)	13
50 MHz to 200 MHz[1]	18 (6)	18	27 (10)	27
200 MHz to 500 MHz	18 (6)	18	21 (8)	27
500 MHz to 3.2 GHz	16 (7)	16	20 (8)	21
3.2 GHz to 10 GHz	14 (9)	13	17 (13)	20
10 GHz to 13.5 GHz	12 (10)	12	17 (14)	17
13.5 GHz to 16 GHz	12 (10)	12	18 (16)	17
16 GHz to 20 GHz	12 (8)	11	16 (11)	18
20 GHz to 24 GHz	11 (8)	10	17 (11)	16
24 GHz to 26.5 GHz	11 (7)	9	12 (10)	15
26.5 GHz to 35 GHz	7 (7)	7	12 (10)	12
35 GHz to 43.5 GHz	7 (7)	7	13 (8)	12
43.5 GHz to 46 GHz	7 (7)	7	13 (9)	13
46 GHz to 47 GHz	6 (6)	6	11 (11)	11
47 GHz to 50 GHz	6 (6)	6	13 (8)	11

( ) With Option 425 installed.
[1] With Option 425 installed and LFE disabled, applied to frequencies ≤ 100 MHz. Above 100 MHz, performance is the same for both LFE enabled or disabled. For LFE enabled performance ≤ 100 MHz, see Table 30 and Table 31.

Table 26. Load Match (dB)

Description	Specification		Typical	
	Options 201, 21x, 22x, 401, 41x, 42x	Option 029	Options 201, 21x, 22x, 401, 41x, 42x	Option 029
	All Ports	Ports 1, 2	All Ports	Ports 1, 2
10 MHz to 50 MHz	10 (8)	10	15 (10)	15
50 MHz to 200 MHz	16 (7)	16	22 (9)	22
200 MHz to 500 MHz	16 (7)	16	18 (8)	22
500 MHz to 3.2 GHz	14 (6)	13	17 (8)	18
3.2 GHz to 10 GHz	13 (6)	11	16 (12)	17
10 GHz to 13.5 GHz	11 (8)	11	15 (13)	16
13.5 GHz to 16 GHz	11 (8)	11	16 (13)	15
16 GHz to 20 GHz	11 (7)	11	16 (12)	16
20 GHz to 24 GHz	10 (6)	8	16 (11)	16
24 GHz to 26.5 GHz	10 (6)	8	12 (11)	16
26.5 GHz to 46 GHz	7 (6)	7	12 (10)	12
46 GHz to 47 GHz	7 (6)	6	11 (13)	11
47 GHz to 50 GHz	7 (6)	6	15 (11)	11

( ) With Option 425 installed.
[1] With Option 425 installed and LFE disabled, applied to frequencies ≤ 100 MHz. Above 100 MHz, performance is the same for both LFE enabled or disabled. For LFE enabled performance ≤ 100 MHz, see Table 30 and Table 31.

Table 27. Reflection /Transmission Tracking, Crosstalk (dB), All Options, All Ports-Typical

Description	Reflection Tracking	Transmission Tracking	Crosstalk
10 MHz to 50 MHz	±1.5	±1.5	-82
50 MHz to 100 MHz	±1.5	±1.5	-85
100 MHz to 500 MHz	±1.5	±1.5	-110
500 MHz to 26.5 GHz	±1.5	±1.5	-120
26.5 GHz to 35 GHz	±1.5[1]	±1.5	-120
35 GHz to 43.5 GHz	±1.5[1]	±1.5	-115
43.5 GHz to 46 GHz	±1.5	±1.5	-115
46 GHz to 47 GHz	±1.5	±1.5	-105
47 GHz to 50 GHz	±1.5	±1.5	-100

[1] Reflection tracking from 26.5 GHz to 43.5 GHz with Option 029 is degraded to +1.5/-7.

Table 28. Noise Mode[1] Uncorrected System Performance (dB), Option 029 - Specification

Description	Source Match		Load Match	
	Port 1	Port 2	Port 1	Port 2
10 MHz to 50 MHz	4	5	4	5
50 MHz to 200 MHz	9	17	10	16
200 MHz to 500 MHz	9	17	10	16
500 MHz to 3.2 GHz	10	16	10	14
3.2 GHz to 10 GHz	10	14	9	13
10 GHz to 16 GHz	10	12	9	11
16 GHz to 20 GHz	8	10	9	10
20 GHz to 24 GHz	8	8	9	8
24 GHz to 26.5 GHz	8	8	9	6
26.5 GHz to 50 GHz	6	6	6	6

[1] Noise mode sets port 1 impedance tuner switch to tuner position and port 2 noise receiver switch to noise receiver position.

Table 29. Noise Mode[1] Uncorrected System Performance (dB), Option 029 - Typical

Description	Source Match		Load Match		Reflection Tracking		Transmission Tracking
	Port 1	Port 2	Port 1	Port 2	Port 1	Port 2	Ports 1, 2
10 MHz to 50 MHz	5	7	6	6	-1.5/-6	±2.5	±1.5
50 MHz to 500 MHz	12	25	12	22	-1.5/-6	±1.5	±1.5
500 MHz to 3.2 GHz	12	21	12	18	-1.5/-6	±1.5	±1.5
3.2 GHz to 10 GHz	14	20	14	17	-1.5/-6	±1.5	±1.5
10 GHz to 13.5 GHz	15	17	15	16	-1.5/-6	±1.5	±1.5
13.5 GHz to 16 GHz	19	17	15	15	-1.5/-6	±1.5	±1.5
16 GHz to 20 GHz	17	18	16	16	-4/-10	±1.5	±1.5
20 GHz to 24 GHz	16	16	16	16	-4/-10	±1.5	±1.5
24 GHz to 26.5 GHz	15	15	16	15	-4/-10	±1.5	±1.5
26.5 GHz to 43.5 GHz	12	12	12	12	-4/-8	±2.5	±1.5
43.5 GHz to 46 GHz	13	13	12	12	-6/-9	±3	±1.5
46 GHz to 50 GHz	11	11	11	11	-6/-9	±3	±1.5

[1] Noise mode sets port 1 impedance tuner switch to tuner position and port 2 noise receiver switch to noise receiver position.

Table 30. Uncorrected System Performance (dB), All Ports, Option 425 (LFE Enabled) - Specifications

Description	Directivity	Source Match	Load Match	Transmission Tracking	Reflection Tracking	Crosstalk
1 kHz to 10 kHz	1	7	7	--	--	--
10 kHz to 1 MHz	16	15	19	--	--	--
1 MHz to 5 MHz	16	9	11	--	--	--
5 MHz to 50 MHz	5	7	8	--	--	--
50 MHz to 100 MHz	5	8	9	--	--	--

Table 31. Uncorrected System Performance (dB), All Ports, Option 425 (LFE Enabled)- Typical

Description	Directivity	Source Match	Load Match	Transmission Tracking	Reflection Tracking	Crosstalk
500 Hz to 900 Hz	--	--	--	--	--	-102
900 Hz to 1 kHz	4	8	9	±1.5	±1.5	-106
1 kHz to 10 kHz	5	9	8	±1.5	±1.5	-100
10 kHz to 100 kHz	23	19	23	±1.5	±1.5	-106
100 kHz to 1 MHz	23	19	23	±1.5	±1.5	-126
1 MHz to 5 MHz	26	13	14	±1.5	±1.5	-121
5 MHz to 10 MHz	11	9	10	±1.5	±1.5	-121
10 MHz to 50 MHz	11	9	10	±1.5	±1.5	-117
50 MHz to 100 MHz	11	11	11	±1.5	±1.5	-117

Test Port Output

See the block diagrams at the end of this document for all models and options.

With option 029, port 1 tuner switch is in bypass position and port 2 noise receiver switch is in normal position unless specified.

Table 32. Frequency Information, All Options

Description	Specification	Typical
N5244B Frequency Range	10 MHz to 43.5 GHz	--
N5245B Frequency Range	10 MHz to 50.0 GHz	--
Frequency Range (Option 425)	900 Hz to 50.0 GHz	500 Hz to 900 Hz
Frequency Resolution	1 Hz	--
Frequency Accuracy	± 0.7 ppm	--
Initial Frequency Accuracy[1]	± 0.2 ppm	± 0.1 ppm
Frequency Stability	--	±0.05 ppm, -10° to 70° C[2] ±0.5 ppm (first year)[3]

[1] Verified after Factory Frequency Reference adjustment, or after adjustment at a Keysight Service Center.
[2] Assumes no variation in time.
[3] Assumes no variation in temperature. Stability generally improves over time.

Table 33. Maximum Leveled Power (dBm), Options 201 or 401

Description	Specification			Typical		
	Ports[1] 1, 3		Ports[1] 2, 4	Ports[1] 1, 3		Ports[1] 2, 4
	Filtered Mode[2]	Hi Power Mode[2]		Filtered Mode[2]	Hi Power Mode[2]	
10 MHz to 50 MHz	4	12	12	12	20	19
50 MHz to 500 MHz	8	13	13	13	20	20
500 MHz to 1 GHz	8	13	13	14	19	19
1 GHz to 2 GHz	8	13	13	14	17	19
2 GHz to 3.2 GHz	8	10	13	14	15	19
3.2 GHz to 10 GHz	13	13	13	19	19	19
10 GHz to 16 GHz	13	13	13	18	18	17
16 GHz to 26.5 GHz	13	13	13	17	17	17
26.5 GHz to 30 GHz	12	12	12	17	17	17
30 GHz to 32 GHz	11	11	11	16	16	16
32 GHz to 35 GHz	12	12	12	17	17	17
35 GHz to 43.5 GHz	9	9	9	13	13	13
43.5 GHz to 47 GHz	5	5	5	11	11	11
47 GHz to 50 GHz	-5	-5	-5	2	2	2

[1] Either port can be used as the source port.
[2] In Filtered Mode, the signal path goes through filters to minimize harmonics below 3.2 GHz. In Hi Power Mode, the signal bypasses the filters to maximize output power.

Table 34. Maximum Leveled Power (dBm), Options 21x or 41x

Description	Specification			Typical		
	Ports[1] 1, 3		Ports[1] 2, 4	Ports[1] 1, 3		Ports[1] 2, 4
	Filtered Mode[2]	Hi Power Mode[2]		Filtered Mode[2]	Hi Power Mode[2]	
10 MHz to 50 MHz	4	9	12	13	20	19
50 MHz to 500 MHz	8	13	13	13	20	20
500 MHz to 1 GHz	8	13	13	14	19	20
1 GHz to 2 GHz	8	12	13	12	17	19
2 GHz to 3.2 GHz	8	10	13	15	15	17
3.2 GHz to 10 GHz	13	13	13	18	18	18
10 GHz to 16 GHz	11	11	11	16	16	16
16 GHz to 26.5 GHz	10	10	10	15	15	15
26.5 GHz to 30 GHz	9	9	9	15	15	15
30 GHz to 32 GHz	7	7	7	13	13	13
32 GHz to 35 GHz	9	9	9	14	14	14
35 GHz to 43.5 GHz	4	4	4	9	9	9
43.5 GHz to 47 GHz	-1	-1	-1	6	6	6
47 GHz to 50 GHz	-11	-11	-11	-5	-5	-5

[1] Either port can be used as the source port.
[2] In Filtered Mode, the signal path goes through filters to minimize harmonics below 3.2 GHz. In Hi Power Mode, the signal bypasses the filters to maximize output power.

Table 35. Maximum Leveled Power (dBm), Options 22x, 422, or 423

Description	Specification			Typical		
	Ports[1] 1, 3		Ports[1] 2, 4	Ports[1] 1, 3		Ports[1] 2, 4
	Filtered Mode[2]	Hi Power Mode[2]		Filtered Mode[2]	Hi Power Mode[2]	
10 MHz to 50 MHz	4	11	10	13	20	19
50 MHz to 500 MHz	8	13	13	13	20	20
500 MHz to 1 GHz	8	13	13	13	18	19
1 GHz to 2 GHz	8	13	13	12	17	18
2 GHz to 3.2 GHz	8	10	13	12	14	17
3.2 GHz to 10 GHz	13	13	13	18	18	18
10 GHz to 16 GHz	11	11	11	16	16	15
16 GHz to 26.5 GHz	10	10	10	14	14	14
26.5 GHz to 30 GHz	9	9	9	14	14	14
30 GHz to 32 GHz	7	7	7	13	13	13
32 GHz to 35 GHz	9	9	9	13	13	13
35 GHz to 43.5 GHz	4	4	4	9	9	8
43.5 GHz to 47 GHz	-2	-2	-2	6	6	6
47 GHz to 50 GHz	-12	-12	-12	-4	-4	-3

[1] Either port can be used as the source port.
[2] In Filtered Mode, the signal path goes through filters to minimize harmonics below 3.2 GHz. In Hi Power Mode, the signal bypasses the filters to maximize output power.

Table 36. Maximum Leveled Power (dBm), Option 425

Description	Specification			Typical		
	Ports[1] 1, 3		Ports[1] 2, 4	Ports[1] 1, 3		Ports[1] 2, 4
	Filtered Mode[2]	Hi Power Mode[2]		Filtered Mode[2]	Hi Power Mode[2]	
10 MHz to 50 MHz[3]	-3	4	3	6	12	12
50 MHz to 500 MHz[3]	3	8	8	7	14	14
500 MHz to 1 GHz	3	8	8	7	13	13
1 GHz to 2 GHz	6	11	11	9	15	15
2 GHz to 3.2 GHz	6	8	11	9	12	12
3.2 GHz to 10 GHz	11	11	11	15	15	15
10 GHz to 16 GHz	9	9	9	13	13	13
16 GHz to 26.5 GHz	8	8	8	13	13	13
26.5 GHz to 30 GHz	7	7	7	13	13	13
30 GHz to 32 GHz	6	6	6	12	12	12
32 GHz to 35 GHz	8	8	8	13	13	13
35 GHz to 43.5 GHz	4	4	4	10	10	10
43.5 GHz to 47 GHz	-2	-2	-2	6	6	6
47 GHz to 50 GHz	-12	-12	-12	-4	-4	-3

[1] Either port can be used as the source port.
[2] In Filtered Mode, the signal path goes through filters to minimize harmonics below 3.2 GHz. In Hi Power Mode, the signal bypasses the filters to maximize output power.
[3] With Option 425 installed and LFE disabled, applied to frequencies ≤ 100 MHz. Above 100 MHz, performance is the same for both LFE enabled or disabled. For LFE enabled performance ≤ 100 MHz, see Table 48.

Table 37. Maximum Leveled Power (dBm), Options 22x, 422, or 423, Combine Mode - Typical

Description	Source 1 Port 1		Source 2 Port 1	
	Filtered Mode[1]	Hi Power Mode[1]	Filtered Mode[1]	Hi Power Mode[1]
10 MHz to 50 MHz	6	13	7	13
50 MHz to 1 GHz	6	11	6	11
1 GHz to 2 GHz	6	10	6	9
2 GHz to 3.2 GHz	6	6	7	6
3.2 GHz to 10 GHz	10	10	9	9
10 GHz to 16 GHz	7	7	7	7
16 GHz to 26.5 GHz	3	3	3	3
26.5 GHz to 35 GHz	1	1	0	0
35 GHz to 43.5 GHz	-3	-3	-5	-5
43.5 GHz to 47 GHz	-6	-6	-10	-10
47 GHz to 50 GHz	-17	-17	-21	-21

[1] In Filtered Mode, the signal path goes through filters to minimize harmonics below 3.2 GHz. In Hi Power Mode, the signal bypasses the filters to maximize output power.

Table 38. Maximum Leveled Power (dBm), Option 425, Combine Mode - Typical

Description	Source 1 Port 1		Source 2 Port 1	
	Filtered Mode[1]	Hi Power Mode[1]	Filtered Mode[1]	Hi Power Mode[1]
10 MHz to 50 MHz[2]	-1	6	-1	6
50 MHz to 1 GHz[2]	1	6	1	6
1 GHz to 2 GHz	4	8	4	7
2 GHz to 3.2 GHz	4	4	5	4
3.2 GHz to 10 GHz	8	8	7	7
10 GHz to 16 GHz	5	5	5	5
16 GHz to 26.5 GHz	2	2	2	2
26.5 GHz to 35 GHz	-1	-1	-2	-2
35 GHz to 43.5 GHz	-2	-2	-2	-2
43.5 GHz to 47 GHz	-7	-7	-7	-7
47 GHz to 50 GHz	-18	-18	-18	-18

[1] In Filtered Mode, the signal path goes through filters to minimize harmonics below 3.2 GHz. In Hi Power Mode, the signal bypasses the filters to maximize output power.
[2] With Option 425 installed and LFE disabled, applied to frequencies ≤ 100 MHz. Above 100 MHz, performance is the same for both LFE enabled or disabled. For LFE enabled performance ≤ 100 MHz, see Table 43.

Table 39. Maximum Leveled Power (dBm), Port 1 and 2, Option 425 with 029[1]

Description	Specification			Typical		
	Port 1		Port 2	Port 1		Port 2
	Filtered Mode[2]	Hi Power Mode[2]		Filtered Mode[2]	Hi Power Mode[2]	
10 MHz to 50 MHz[3]	-4	3	3	5	11	12
50 MHz to 500 MHz[3]	2	7	8	6	13	14
500 MHz to 1 GHz	3	8	7	7	13	12
1 GHz to 2 GHz	6	11	10	9	15	14
2 GHz to 3.2 GHz	6	8	10	9	12	11
3.2 GHz to 10 GHz	11	11	10	15	15	14
10 GHz to 16 GHz	7	7	8	11	11	12
16 GHz to 26.5 GHz	6	6	7	11	11	12
26.5 GHz to 30 GHz	5	5	6	11	11	12
30 GHz to 32 GHz	4	4	5	10	10	11
32 GHz to 35 GHz	6	6	7	11	11	12
35 GHz to 43.5 GHz	2	2	3	8	8	9
43.5 GHz to 47 GHz	-4	-2	-3	4	4	5
47 GHz to 50 GHz	-14	-14	-13	-6	-6	-4

[1] Option 029 only affects port 1 and port 2 maximum leveled power. Refer to Table 35 for ports 3 and 4.
[2] In Filtered Mode, the signal path goes through filters to minimize harmonics below 3.2 GHz. In Hi Power Mode, the signal bypasses the filters to maximize output power.
[3] With Option 425 installed and LFE disabled, applied to frequencies ≤ 100 MHz. Above 100 MHz, performance is the same for both LFE enabled or disabled. For LFE enabled performance ≤ 100 MHz, see Table 48.

Table 40. Maximum Leveled Power (dBm), Option 425 with 029, Combine Mode - Typical

Description	Source 1 Port 1		Source 2 Port 1	
	Filtered Mode[1]	Hi Power Mode[1]	Filtered Mode[1]	Hi Power Mode[1]
10 MHz to 50 MHz[2]	-3	4	-2	4
50 MHz to 1 GHz[2]	1	8	1	8
1 GHz to 2 GHz	1	6	1	5
2 GHz to 3.2 GHz	1	2	1	2
3.2 GHz to 10 GHz	6	6	5	5
10 GHz to 16 GHz	2	2	2	2
16 GHz to 26.5 GHz	0	0	0	0
26.5 GHz to 35 GHz	0	0	-1	-1
35 GHz to 43.5 GHz	-5	-5	-6	-6
43.5 GHz to 47 GHz	-9	-9	-11	-11
47 GHz to 50 GHz	-21	-21	-25	-25

[1] In Filtered Mode, the signal path goes through filters to minimize harmonics below 3.2 GHz. In Hi Power Mode, the signal bypasses the filters to maximize output power.
[2] With Option 425 installed and LFE disabled, applied to frequencies ≤ 100 MHz. Above 100 MHz, performance is the same for both LFE enabled or disabled. For LFE enabled performance ≤ 100 MHz, see Table 41.

Table 41. Maximum Power (dBm), All Ports, Option 425 with 029 (LFE Enabled), Combine Mode - Typical

Description	Source 1 Port 1	Source 2 Port 1
500 Hz to 900 Hz	6	6
900 Hz to 1 kHz	7	6
1 kHz to 10 kHz	7	7
10 kHz to 100 kHz	8	7
100 kHz to 1 MHz	8	7
1 MHz to 5 MHz	7	6
5 MHz to 10 MHz	5	4
10 MHz to 50 MHz	5	4
50 MHz to 100 MHz	5	4

Table 42. Maximum Leveled Power (dBm), Noise Mode[1], Options 425 with 029 - Typical

Description	Port 1				Source 2 Port 1		Port 2
	Normal Mode		Combine Mode		Combine Mode		
	Filtered Mode[2]	Hi Power Mode[2]	Filtered Mode[2]	Hi Power Mode[2]	Filtered Mode[2]	Hi Power Mode[2]	
10 MHz to 50 MHz[3]	-2	5	-9	-2	-8	-2	-1
50 MHz to 500 MHz[3]	3	10	-4	3	-4	3	6
500 MHz to 1 GHz	3	11	-3	4	-3	4	4
1 GHz to 2 GHz	3	9	-3	2	-3	1	4
2 GHz to 3.2 GHz	3	6	-3	-2	-3	-2	3
3.2 GHz to 10 GHz	9	9	1	1	0	0	4
10 GHz to 16 GHz	5	5	-4	-4	-4	-4	1
16 GHz to 26.5 GHz	4	4	-7	-7	-7	-7	0
26.5 GHz to 30 GHz	6	6	-6	-6	-7	-7	-8
30 GHz to 32 GHz	3	3	-7	-7	-8	-8	0
32 GHz to 35 GHz	5	5	-7	-7	-8	-8	-8
35 GHz to 43.5 GHz	0	0	-12	-12	-13	-13	-3
43.5 GHz to 47 GHz	-5	-5	-17	-17	-19	-19	-5
47 GHz to 50 GHz	-16	-16	-29	-29	-33	-33	-17

[1] Noise mode sets port 1 impedance tuner switch to tuner position and port 2 noise receiver switch to noise receiver position.
[2] In Filtered Mode, the signal path goes through filters to minimize harmonics below 3.2 GHz. In Hi Power Mode, the signal bypasses the filters to maximize output power.
[3] With Option 425 installed and LFE disabled, applied to frequencies ≤ 100 MHz. Above 100 MHz, performance is the same for both LFE enabled or disabled.

Table 43. Maximum Power (dBm), All Ports, Option 425 (LFE Enabled), Combine Mode - Typical

Description	Source 1 Port 1	Source 2 Port 1
500 Hz to 900 Hz	6	6
900 Hz to 1 kHz	7	6
1 kHz to 10 kHz	7	7
10 kHz to 100 kHz	8	7
100 kHz to 1 MHz	8	7
1 MHz to 5 MHz	7	6
5 MHz to 10 MHz	5	4
10 MHz to 50 MHz	5	4
50 MHz to 100 MHz	5	4

Table 44. Maximum Leveled Power (dBm), Option 22x

Description	Specification			Typical		
	Source 2 Out 1		Source 2 Out 2	Source 2 Out 1		Source 2 Out 2
	Filtered Mode[1]	Hi Power Mode[1]		Filtered Mode[1]	Hi Power Mode[1]	
10 MHz to 50 MHz	4	13	13	13	20	19
50 MHz to 500 MHz	8	18	15	13	20	20
500 MHz to 1 GHz	8	16	13	14	19	20
1 GHz to 2 GHz	8	13	13	13	18	20
2 GHz to 3.2 GHz	8	11	13	13	16	18
3.2 GHz to 10 GHz	14	14	16	20	20	20
10 GHz to 16 GHz	12	12	13	19	19	18
16 GHz to 26.5 GHz	14	14	14	19	19	19
26.5 GHz to 30 GHz	14	14	14	19	19	19
30 GHz to 32 GHz	13	13	14	18	18	19
32 GHz to 35 GHz	14	14	14	19	19	19
35 GHz to 43.5 GHz	11	11	12	15	15	16
43.5 GHz to 47 GHz	7	7	8	13	13	14
47 GHz to 50 GHz	-2	-2	-2	5	5	8

[1] In Filtered Mode, the signal path goes through filters to minimize harmonics below 3.2 GHz. In Hi Power Mode, the signal bypasses the filters to maximize output power.

Table 45. Maximum Leveled Power (dBm), Options 22x, 422, or 423 with 029[1]

Description	Specification			Typical		
	Port 1		Port 2	Port 1		Port 2
	Filtered Mode[2]	Hi Power Mode[2]		Filtered Mode[2]	Hi Power Mode[2]	
10 MHz to 50 MHz	4	11	10	11	18	19
50 MHz to 500 MHz	8	13	13	11	18	19
500 MHz to 1 GHz	8	13	13	10	18	16
1 GHz to 2 GHz	8	13	13	10	16	16
2 GHz to 3.2 GHz	8	10	13	10	13	16
3.2 GHz to 10 GHz	13	13	13	16	16	16
10 GHz to 16 GHz	10	10	10	13	13	13
16 GHz to 26.5 GHz	8	8	8	13	13	13
26.5 GHz to 30 GHz	7	7	7	13	13	13
30 GHz to 32 GHz	5	5	5	11	11	11
32 GHz to 35 GHz	7	7	7	13	13	13
35 GHz to 43.5 GHz	1	1	1	8	8	8
43.5 GHz to 47 GHz	-4	-4	-4	4	4	5
47 GHz to 50 GHz	-15	-15	-15	-7	-7	-6

[1] Option 029 affects port 1 and port 2 maximum leveled power. Refer to Table 35 for other ports.
[2] In Filtered Mode, the signal path goes through filters to minimize harmonics below 3.2 GHz. In Hi Power Mode, the signal bypasses the filters to maximize output power.

Table 46. Maximum Leveled Power (dBm), Options 22x or 42x with 029[1], Combine Mode-Typical

Description	Source 1 Port 1		Source 2 Port 1	
	Filtered Mode[2]	Hi Power Mode[2]	Filtered Mode[2]	Hi Power Mode[2]
10 MHz to 50 MHz	4	11	5	11
50 MHz to 1 GHz	4	11	4	11
1 GHz to 2 GHz	4	9	4	8
2 GHz to 3.2 GHz	4	5	4	5
3.2 GHz to 10 GHz	8	8	7	7
10 GHz to 16 GHz	4	4	4	4
16 GHz to 26.5 GHz	2	2	2	2
26.5 GHz to 35 GHz	1	1	0	0
35 GHz to 43.5 GHz	-4	-4	-5	-5
43.5 GHz to 47 GHz	-8	-8	-10	-10
47 GHz to 50 GHz	-20	-20	-24	-24

[1] Option 029 affects port 1 and port 2 maximum leveled power. Refer to Table 35 for other ports.
[2] In Filtered Mode, the signal path goes through filters to minimize harmonics below 3.2 GHz. In Hi Power Mode, the signal bypasses the filters to maximize output power.

Table 47. Maximum Leveled Power (dBm), Noise Mode[1], Options 22x or 42x with 029[1] - Typical

Description	Port 1				Source 2 Port 1		Port 2
	Normal Mode		Combine Mode		Combine Mode		
	Filtered Mode[2]	Hi Power Mode[2]	Filtered Mode[2]	Hi Power Mode[2]	Filtered Mode[2]	Hi Power Mode[2]	
10 MHz to 50 MHz	5	12	-2	5	-1	5	6
50 MHz to 500 MHz	7	14	0	7	0	7	10
500 MHz to 1 GHz	6	14	0	7	0	7	7
1 GHz to 2 GHz	6	12	0	5	0	4	7
2 GHz to 3.2 GHz	6	9	0	1	0	1	6
3.2 GHz to 10 GHz	11	11	3	3	2	2	6
10 GHz to 16 GHz	7	7	-2	-2	-2	-2	3
16 GHz to 26.5 GHz	6	6	-5	-5	-5	-5	2
26.5 GHz to 30 GHz	7	7	-5	-5	-6	-6	-7
30 GHz to 32 GHz	4	4	-6	-6	-7	-7	1
32 GHz to 35 GHz	6	6	-6	-6	-7	-7	-7
35 GHz to 43.5 GHz	1	1	-11	-11	-12	-12	-2
43.5 GHz to 47 GHz	-4	-4	-16	-16	-18	-18	-4
47 GHz to 50 GHz	-15	-15	-28	-28	-32	-32	-16

[1] Noise mode sets port 1 tuner switch to tuner position and port 2 noise receiver switch to noise receiver position.
[2] In Filtered Mode, the signal path goes through filters to minimize harmonics below 3.2 GHz. In Hi Power Mode, the signal bypasses the filters to maximize output power.

Table 48. Maximum Power (dBm), All Ports – Option 425 and Option 425 with 029 (LFE Enabled)

Description	Specification	Typical[1]
500 Hz to 900 Hz	--	12
900 Hz to 1 kHz	10	13
1 kHz to 10 kHz	12	13
10 kHz to 100 kHz	12	14
100 kHz to 1 MHz	12	14
1 MHz to 5 MHz	10	13
5 MHz to 10 MHz	9	11
10 MHz to 50 MHz	8	10
50 MHz to 100 MHz	8	10

[1] Values apply to all ports. Ports 2 and 4 typically 1 dB higher.

Table 49. Typical Output Power Range of SRC3 on Rear Panel (dBm) - Option XSB[1]

Description	Power Range
10 MHz to 6 GHz	-65 to 9
6 GHz to 7.6 GHz	-65 to 8.5
7.6 GHz to 9.6 GHz	-65 to 8.5
9.6 GHz to 12 GHz	-65 to 6.5
12 GHz to 13.5 GHz	-65 to 7.5

[1] Option XSB requires Option 422 or Option 423.

Table 50. Power Level Accuracy (dB) at Nominal Power[1], All Options

Description	Specification		Typical	
	Ports[2] 1, 2, 3, 4	Source 2 Out 1 Source 2 Out 2	Ports[2] 1, 2, 3, 4	Source 2 Out 1 Source 2 Out 2
10 MHz to 50 MHz[3]	± 1.5	± 2.5	± 0.27	± 0.30
50 MHz to 1 GHz[3]	± 1.2	± 2.0	± 0.24	± 0.26
1 GHz to 3.2 GHz	± 1.2	± 2.0	± 0.33	± 0.20
3.2 GHz to 13.5 GHz	± 1.5	± 2.0	± 0.33	± 0.20
13.5 GHz to 20 GHz	± 1.5	± 2.5	± 0.36	± 0.52
20 GHz to 26.5 GHz	± 2.0	± 2.5	± 0.47	± 0.44
26.5 GHz to 43.5 GHz	± 3.0	±3.5	± 0.25	± 0.27
43.5 GHz to 50 GHz	± 3.5	±3.5	± 0.97	± 0.82

[1] Level accuracy at power other than nominal power, Power Level Accuracy (dB) at Nominal Power + Power Level Linearity (dB)
[2] Any port can be used as the source port. Source in filtered mode where applicable.
[3] With Option 425 installed and LFE disabled, applied to frequencies ≤ 100 MHz. Above 100 MHz, performance is the same for both LFE enabled or disabled. For LFE enabled performance ≤ 100 MHz, see Table 51.

Table 51. Power Level Accuracy (dB), All Ports, Option 425 and Option 425 with 029 (LFE Enabled)

Description	Specification	Typical[1]
500 Hz to 900 Hz	--	± 0.1
900 Hz to 1 kHz	± 1.0	± 0.1
1 kHz to 10 kHz	± 1.0	± 0.1
10 kHz to 100 kHz	± 1.0	± 0.1
100 kHz to 1 MHz	± 1.0	± 0.15
1 MHz to 5 MHz	± 1.0	± 0.15
5 MHz to 10 MHz	± 1.0	± 0.2
10 MHz to 50 MHz	± 1.0	± 0.2
50 MHz to 100 MHz	± 1.0	± 0.2

Table 52. Power Level Linearity[1] (dB), All Options - Specification

Description	Ports 1, 3[2] -25 dBm ≤ P <-20 dBm	Ports 1, 3[2] -20 dBm ≤ P <-15 dBm	Ports 1, 3[2] P ≥ -15 dBm
10 MHz to 50 GHz[3]	± 1.5	± 1.5	± 1.5

[1] Referenced to nominal power.
[2] Either port can be used as the source port. Source in filtered mode.
[3] With Option 425 installed and LFE disabled, applied to frequencies ≤ 100 MHz. Above 100 MHz, performance is the same for both LFE enabled or disabled. For LFE enabled performance ≤ 100 MHz, see Table 55.

Table 53. Power Level Linearity[1] (dB), All Options - Specification

Description	Ports 2, 4[2] -25 dBm ≤ P <-20 dBm	Ports 2, 4[2] -20 dBm ≤ P <-15 dBm	Ports 2, 4[2] P ≥ -15 dBm
10 MHz to 50 GHz[3]	± 2.0	± 1.5	± 1.5

[1] Referenced to nominal power.
[2] Either port can be used as the source port.
[3] With Option 425 installed and LFE disabled, applied to frequencies ≤ 100 MHz. Above 100 MHz, performance is the same for both LFE enabled or disabled. For LFE enabled performance ≤ 100 MHz, see Table 55.

Table 54. Power Level Linearity[1] (dB), Option 22x - Specification

Description	Source 2 Out 1[2] P ≥ -15 dBm	Source 2 Out 2 -15 dBm ≤ P < -10 dBm	Source 2 Out 2 P ≥ -10 dBm
10 MHz to 50 GHz[3]	± 1.0	± 1.0	± 1.0

[1] Referenced to nominal power.
[2] Source in filtered mode.
[3] With Option 425 installed and LFE disabled, applied to frequencies ≤ 100 MHz. Above 100 MHz, performance is the same for both LFE enabled or disabled. For LFE enabled performance ≤ 100 MHz, see Table 55.

Table 55. Power Level Linearity[1] (dB), All Ports, Option 425 and Option 425 with 029 (LFE Enabled)

Description	Specification
500 Hz to 900 Hz	--
900 Hz to 100 MHz	±1.0

[1] Referenced to nominal power, from -25 dBm to max power.

Table 56. Power Sweep Range (dB), Options 201 or 401

Description	Specification		Typical	
	Ports[1] 1, 3	Ports[1] 2, 4	Ports[1] 1, 3	Ports[1] 2, 4
10 MHz to 50 MHz	37	37	47	46
50 MHz to 500 MHz	38	38	47	47
500 MHz to 1 GHz	38	38	46	46
1 GHz to 2 GHz	38	38	44	46
2 GHz to 3.2 GHz	35	38	42	46
3.2 GHz to 10 GHz	38	38	46	46
10 GHz to 16 GHz	38	38	45	44
16 GHz to 26.5 GHz	38	38	43	44
26.5 GHz to 30 GHz	37	37	44	44
30 GHz to 32 GHz	36	36	43	43
32 GHz to 35 GHz	37	37	44	44
35 GHz to 43.5 GHz	34	34	40	40
43.5 GHz to 47 GHz	30	30	38	38
47 GHz to 50 GHz	20	20	29	29

[1] Either port can be used as the source port. Source in Hi Power mode where applicable.

Table 57. Power Sweep Range (dB), Options 21x or 41x

Description	Specification		Typical	
	Ports[1] 1, 3	Ports[1] 2, 4	Ports[1] 1, 3	Ports[1] 2, 4
10 MHz to 50 MHz	34	37	47	46
50 MHz to 500 MHz	38	38	47	47
500 MHz to 1 GHz	38	38	46	47
1 GHz to 2 GHz	37	38	44	46
2 GHz to 3.2 GHz	35	38	42	44
3.2 GHz to 10 GHz	38	38	45	45
10 GHz to 16 GHz	36	36	43	43
16 GHz to 26.5 GHz	35	35	42	42
26.5 GHz to 30 GHz	34	34	42	42
30 GHz to 32 GHz	32	32	40	40
32 GHz to 35 GHz	34	34	41	41
35 GHz to 43.5 GHz	29	29	36	36
43.5 GHz to 47 GHz	24	24	33	33
47 GHz to 50 GHz	14	14	22	22

[1] Either port can be used as the source port. Source in Hi Power mode where applicable.

Table 58. Power Sweep Range (dB), Options 22x, 422, or 423

Description	Specification		Typical	
	Ports[1] 1, 3	Ports[1] 2, 4	Ports[1] 1, 3	Ports[1] 2, 4
10 MHz to 50 MHz	36	35	47	46
50 MHz to 500 MHz	38	38	47	47
500 MHz to 1 GHz	38	38	45	46
1 GHz to 2 GHz	38	38	44	45
2 GHz to 3.2 GHz	35	38	41	44
3.2 GHz to 10 GHz	38	38	45	45
10 GHz to 16 GHz	36	36	43	42
16 GHz to 26.5 GHz	35	35	41	41
26.5 GHz to 30 GHz	34	34	41	41
30 GHz to 32 GHz	32	32	40	40
32 GHz to 35 GHz	34	34	40	40
35 GHz to 43.5 GHz	29	29	36	35
43.5 GHz to 47 GHz	23	23	33	33
47 GHz to 50 GHz	13	13	23	24

[1] Either port can be used as the source port. Source in Hi Power mode where applicable.

Table 59. Power Sweep Range (dB), Option 22x

Description	Specification		Typical	
	Source 2 Out 1[1]	Source 2 Out 2	Source 2 Out 1[1]	Source 2 Out 2
10 MHz to 50 MHz	28	28	37	36
50 MHz to 500 MHz	33	30	37	37
500 MHz to 1 GHz	31	28	36	37
1 GHz to 2 GHz	28	28	35	37
2 GHz to 3.2 GHz	26	28	33	35
3.2 GHz to 10 GHz	29	31	37	37
10 GHz to 16 GHz	27	28	36	35
16 GHz to 26.5 GHz	29	29	36	36
26.5 GHz to 30 GHz	29	29	36	36
30 GHz to 32 GHz	28	29	35	36
32 GHz to 35 GHz	29	29	36	36
35 GHz to 43.5 GHz	26	27	32	33
43.5 GHz to 47 GHz	22	23	30	31
47 GHz to 50 GHz	13	13	22	25

[1] Source in Hi Power mode where applicable.

Table 60. Power Sweep Range (dB), Options 22x, 422, or 423 with 029[1]

Description	Specification		Typical	
	Port 1[2]	Port 2	Port 1[2]	Port 2
10 MHz to 50 MHz	36	35	45	46
50 MHz to 500 MHz	38	38	45	46
500 MHz to 1 GHz	38	38	45	43
1 GHz to 2 GHz	38	38	43	43
2 GHz to 3.2 GHz	35	38	40	43
3.2 GHz to 10 GHz	38	38	43	43
10 GHz to 16 GHz	35	35	40	40
16 GHz to 26.5 GHz	33	33	40	40
26.5 GHz to 30 GHz	30	32	40	40
30 GHz to 32 GHz	30	30	38	38
32 GHz to 35 GHz	32	32	40	40
35 GHz to 43.5 GHz	26	26	35	35
43.5 GHz to 47 GHz	21	21	31	32
47 GHz to 50 GHz	10	10	20	21

[1] Option 029 affects port 1 and port 2 power sweep ranges. Refer to Table 57 and Table 58 for other ports.
[2] Source in Hi Power mode where applicable.

Table 61. Power Sweep Range (dB), Option 425

Description	Specification (dBm)		Typical (dBm)	
	Ports 1, 3	Ports 2, 4	Ports 1, 3	Ports 2, 4
10 MHz to 50 MHz[1]	29	28	39	39
50 MHz to 500 MHz[1]	33	33	41	41
500 MHz to 1 GHz	33	33	40	40
1 GHz to 2 GHz	36	36	42	42
2 GHz to 3.2 GHz	33	36	39	39
3.2 GHz to 10 GHz	36	36	42	42
10 GHz to 16 GHz	34	34	40	40
16 GHz to 26.5 GHz	33	33	40	40
26.5 GHz to 30 GHz	32	32	40	40
30 GHz to 32 GHz	31	31	39	39
32 GHz to 35 GHz	33	33	40	40
35 GHz to 43.5 GHz	29	29	37	37
43.5 GHz to 47 GHz	23	23	33	33
47 GHz to 50 GHz	13	13	23	24

[1] With Option 425 installed and LFE disabled, applied to frequencies ≤ 100 MHz. Above 100 MHz, performance is the same for both LFE enabled or disabled. For LFE enabled performance ≤ 100 MHz, see Table 63.

Table 62. Power Sweep Range (dB), Option 425 with 029

Description	Specification (dBm)				Typical (dBm)			
	Port 1	Port 2	Port 3	Port 4	Port 1	Port 2	Port 3	Port 4
10 MHz to 50 MHz[1]	28	28	29	28	38	39	39	39
50 MHz to 500 MHz[1]	32	33	33	33	40	41	41	41
500 MHz to 1 GHz	33	32	33	33	40	39	40	40
1 GHz to 2 GHz	36	35	36	36	42	41	42	42
2 GHz to 3.2 GHz	33	35	33	36	39	38	39	39
3.2 GHz to 10 GHz	36	35	36	36	42	41	42	42
10 GHz to 16 GHz	32	33	34	34	38	39	40	40
16 GHz to 26.5 GHz	31	32	33	33	38	39	40	40
26.5 GHz to 30 GHz	30	31	32	32	38	39	40	40
30 GHz to 32 GHz	29	30	31	31	37	38	39	39
32 GHz to 35 GHz	31	32	33	33	38	40	40	40
35 GHz to 43.5 GHz	27	28	29	29	35	36	37	37
43.5 GHz to 47 GHz	21	22	23	23	31	32	33	33
47 GHz to 50 GHz	11	12	13	13	21	23	23	24

[1] With Option 425 installed and LFE disabled, applied to frequencies ≤ 100 MHz. Above 100 MHz, performance is the same for both LFE enabled or disabled. For LFE enabled performance ≤ 100 MHz, see Table 63.

Table 63. Power Sweep Range (dB) –Option 425 and Option 425 with 029 (LFE Enabled)

Description	Specification	Typical[1]
500 Hz to 900 Hz	--	39
900 Hz to 1 kHz	35	40
1 kHz to 10 kHz	37	40
10 kHz to 100 kHz	37	41
100 kHz to 1 MHz	37	41
1 MHz to 5 MHz	35	40
5 MHz to 10 MHz	34	38
10 MHz to 50 MHz	33	37
50 MHz to 100 MHz	33	37

Table 64. Nominal Power (Preset Power, dBm)

Description	Specification			Typical	
	All Options	Option 22x		Options 22x, 42x	
	Ports[1] 1, 2, 3, 4	Source 2 Out 1	Source 2 Out 2	Source 1 Port 1 Combine Mode	Source 2 Port 1 Combine Mode
N5244B	-5	-5	-5	-15	-15
N5245B	-15	-5	-5	-25	-30

[1] Any port can be used as the source port.

Table 65. Power Resolution and Maximum/Minimum Settable Power, All Ports[1]

Description	Specification (dB)	Typical (dBm)		
	All Options	All Options	Options 201, 401	Options 21x, 41x, 22x, 42x
Power Resolution	0.01	--	--	--
Maximum Settable Power[2]	--	30	--	--
Minimum Settable Power[2]	--	--	-30	-90

[1] Any port can be used as the source port.
[2] For Option XSB power range, see Table 49.

Table 66. 2nd and 3rd Harmonics at Max Specified Power (dBc), All Options - Typical

Listed frequency is fundamental frequency; test at max specified power.

Description	2nd Harmonic		3rd Harmonic	
	Ports 1, 3 Source 2 Out 1[1]	Ports 2, 4 Source 2 Out 2	Ports 1, 3 Source 2 Out 1[1]	Ports 2, 4 Source 2 Out 2
10 MHz to 50 MHz[2]	-44	-15	-49	-15
50 MHz to 2 GHz[2]	-55	-23	-60	-15
2 GHz to 13.5 GHz	-60	-20	-65	-19
13.5 GHz to 16.7 GHz	-60	-60	-65	-65
16.7 GHz to 25 GHz	-60	-60	--	--

[1] At the same level as the maximum specified power for Port 1.
[2] With an LFE option installed and LFE disabled, applied to frequencies ≤ 100 MHz. Above 100 MHz, performance is the same for both LFE enabled or disabled. For LFE enabled performance ≤ 100 MHz, see Table 67.

Table 67. 2nd and 3rd Harmonics at Max Specified Power (dBc), All Ports, Option 425 (LFE Enabled) - Typical

Listed frequency is fundamental frequency; test at max specified power.

Description	2nd Harmonic	3rd Harmonic
500 Hz to 900 Hz	-32	-31
900 Hz to 1 kHz	-22	-23
1 kHz to 10 kHz	-22	-23
10 kHz to 100 kHz	-22	-23
100 kHz to 1 MHz	-25	-22
1 MHz to 5 MHz	-28	-24
5 MHz to 10 MHz	-27	-22
10 MHz to 33 MHz	-28	-21
33 MHz to 50 MHz	-28	--

Table 68. Non-Harmonic Spurs[1] at Nominal Power (dBc), All Options – Typical

Listed frequency is Source CW frequency, tested at 0 dBm.

Description	Non-Harmonic	±600 MHz Tracking Spur
10 MHz to 1 GHz	-80	-80
1 GHz to 10 GHz	-85	-81
10 GHz to 20 GHz	-82	-75
20 GHz to 31 GHz	-80	-70
31 GHz to 50 GHz	-77	-67

[1] Non-harmonic spurs are negligible with Option 425 installed and LFE enabled.

Tracking Spurs (Linear Frequency Scale)

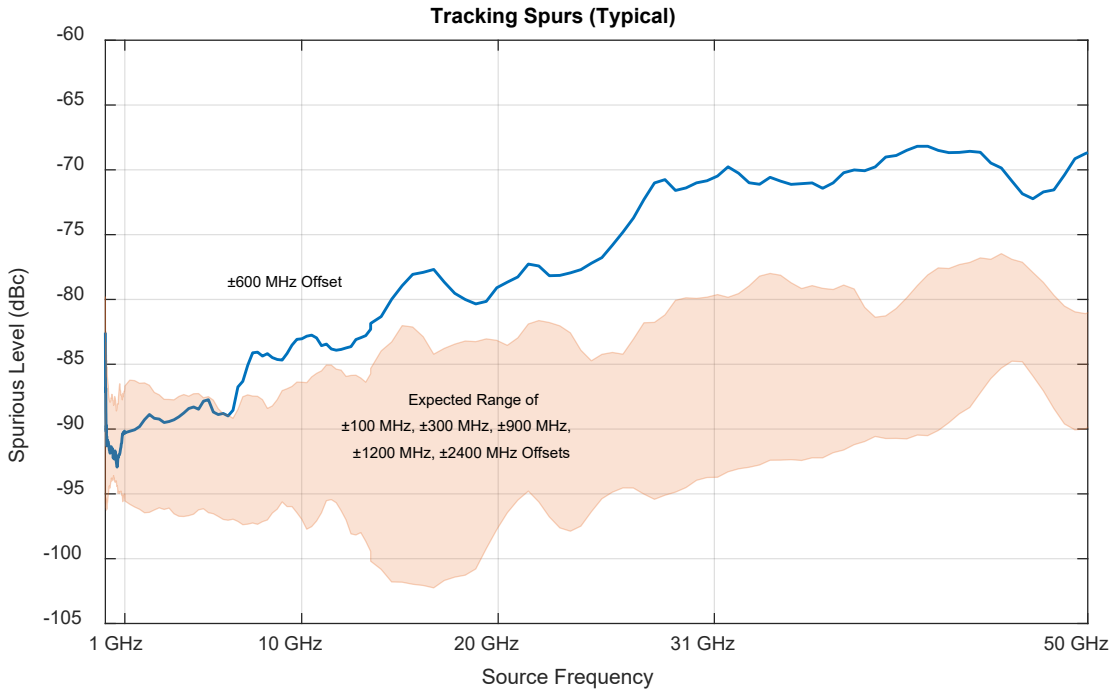

Tracking Spurs (Logarithmic Frequency Scale)

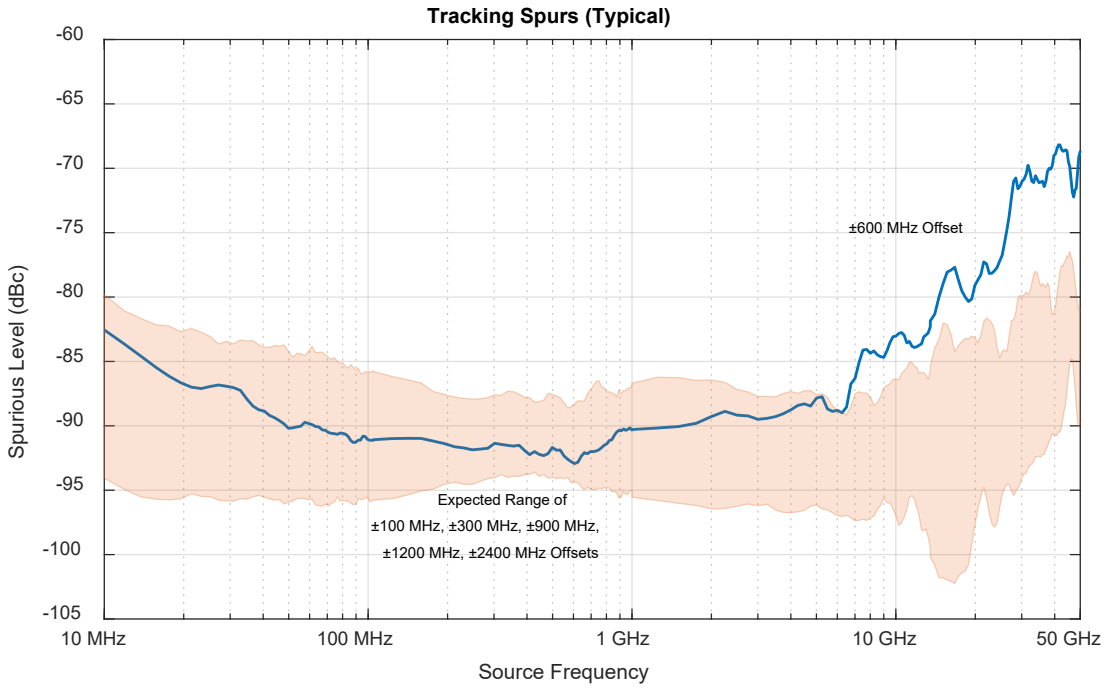

Table 69. Phase Noise (dBc/Hz), All Options, with UNY, Port 1, 3, Src2Out1 - Typical

CW Frequency	100 Hz Offset	1 kHz Offset	10 kHz Offset	100 kHz Offset	1 MHz Offset	10 MHz Offset
1 GHz	-112	-132	-137	-143	-145	-144
5 GHz	-103	-123	-132	-135	-147	-150
10 GHz	-96	-116	-126	-130	-142	-146
20 GHz	-91	-111	-118	-123	-135	-139
26.5 GHz	-87	-106	-115	-121	-131	-135

Table 70. Phase Noise (dBc/Hz), All Options, with UNY, Port 2, 4, Src2Out2 - Typical

CW Frequency	100 Hz Offset	1 kHz Offset	10 kHz Offset	100 kHz Offset	1 MHz Offset	10 MHz Offset
1 GHz	-111	-121	-132	-145	-149	-149
5 GHz	-103	-122	-128	-134	-145	-149
10 GHz	-96	-112	-120	-127	-140	-147
20 GHz	-90	-108	-116	-123	-134	-139
26.5 GHz	-86	-106	-114	-121	-131	-135

Table 71. Phase Noise (dBc/Hz), All Options, with UNY, All Ports – Supplemental Performance Data

CW Frequency	100 Hz Offset	1 kHz Offset	10 kHz Offset	100 kHz Offset	1 MHz Offset	10 MHz Offset
43.5 GHz	-82	-106	-113	-117	-129	-135
50 GHz	-81	-101	-109	-116	-127	-132

Phase Noise with Option UNY

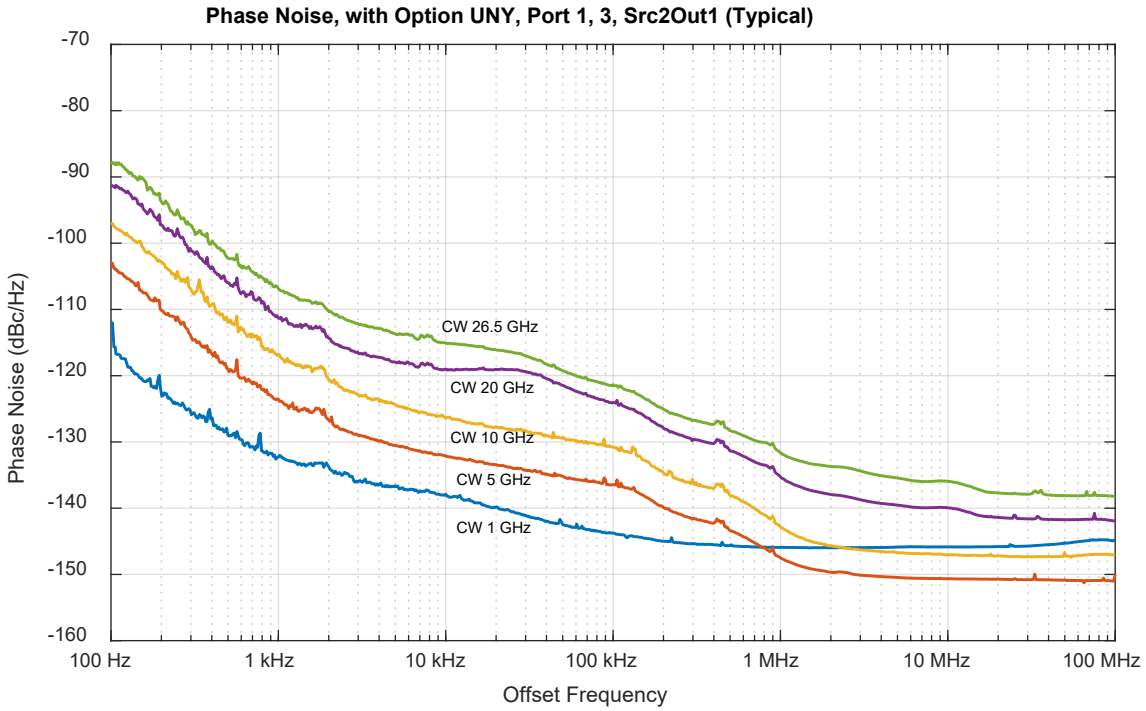

Phase Noise with Option UNY (Supplemental Performance Data)

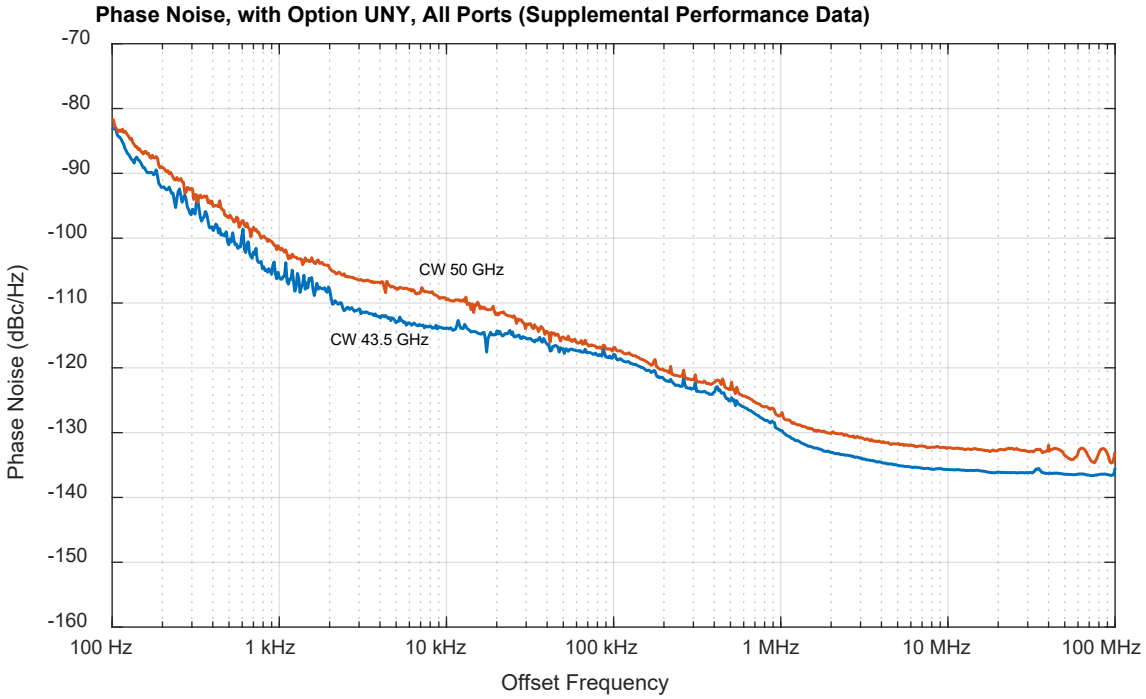

Table 72. Phase Noise (dBc/Hz), Option 425, 425 with 029, and with UNY, All Ports (LFE Enabled) - Typical

Description	1 kHz Offset	10 kHz Offset	100 kHz Offset	1 MHz Offset
500 Hz to 100 MHz	-120	-130	-125	-135

Table 73. Phase Noise (dBc/Hz), All Options, without UNY, All Ports - Typical

CW Frequency	100 Hz Offset	1 kHz Offset	10 kHz Offset	100 kHz Offset	1 MHz Offset	10 MHz Offset
1 GHz	-94	-116	-130	-141	-145	-146
5 GHz	-83	-106	-119	-128	-139	-147
10 GHz	-78	-100	-113	-122	-133	-142
20 GHz	-72	-94	-107	-116	-127	-135
26.5 GHz	-67	-90	-104	-114	-124	-132

Table 74. Phase Noise (dBc/Hz), All Options, without UNY, All Ports – Supplemental Performance Data

CW Frequency	100 Hz Offset	1 kHz Offset	10 kHz Offset	100 kHz Offset	1 MHz Offset	10 MHz Offset
43.5 GHz	-70	-90	-103	-112	-122	-130
50 GHz	-66	-86	-101	-111	-121	-130

Phase Noise, CW 10 GHz, with Option UNY and without Option UNY

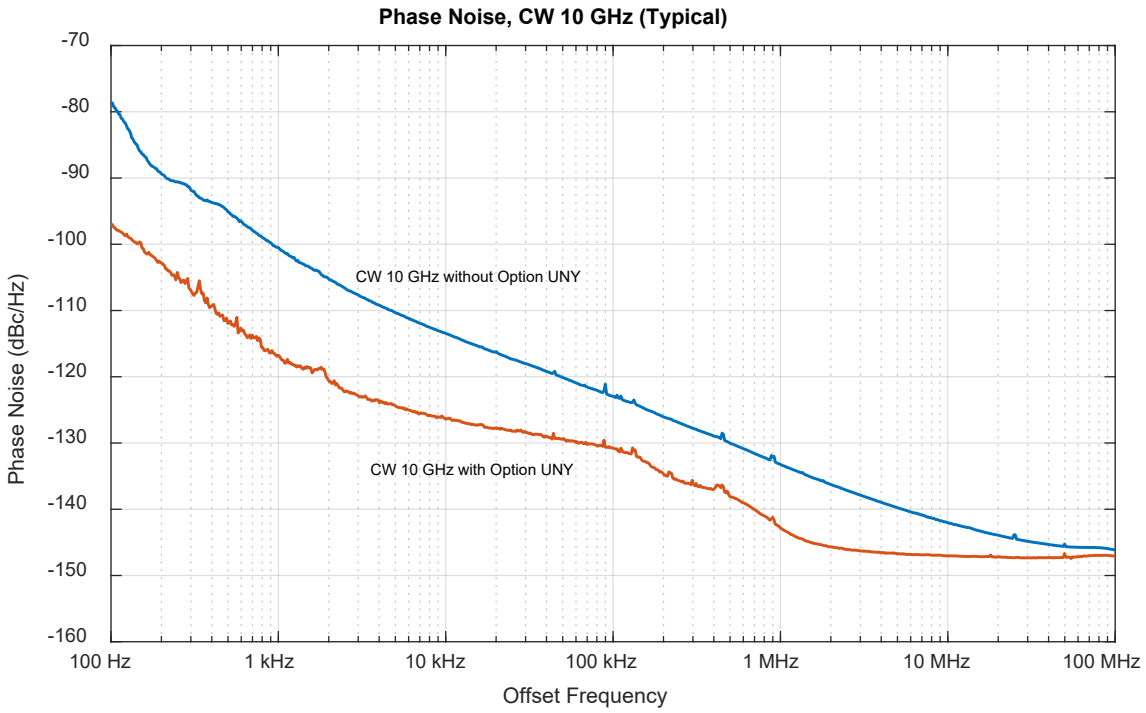

Test Port Input

Table 75. Noise Floor[1] (dBm) @ 10 Hz IFBW, All Options, All Ports

Description	Specification		Typical	
	Test Port	Direct Receiver Access Input	Test Port	Direct Receiver Access Input
10 MHz to 50 MHz[2, 3]	-70	-105	-76	-111
50 MHz to 100 MHz[2, 3]	-85	-105	-91	-111
100 MHz to 500 MHz[2]	-90	-110	-98	-118
500 MHz to 1 GHz	-106	-127	-112	-133
1 GHz to 2 GHz	-110	-130	-114	-134
2 GHz to 10 GHz	-110	-122	-114	-126
10 GHz to 26.5 GHz	-111	-123	-114	-126
26.5 GHz to 40 GHz	-108	-118	-113	-123
40 GHz to 43.5 GHz	-109	-119	-113	-123
43.5 GHz to 50 GHz	-107	-117	-113	-123

[1] Total average (rms) noise power calculated as the mean value of a linear magnitude trace expressed in dBm.
[2] May typically be degraded at particular frequencies below 500 MHz due to spurious receiver residuals.
[3] With Option 425 installed and LFE disabled, applied to frequencies ≤ 100 MHz. Above 100 MHz, performance is the same for both LFE enabled or disabled. For LFE enabled performance ≤ 100 MHz, see Table 76.

Table 76. Test Port Noise Floor (dBm) @ 10 Hz IFBW Option 425 (LFE Enabled)

Description	Specification	Typical
500 Hz to 900 Hz	--	-93
900 Hz to 1 kHz	-90	-96
1 kHz to 10 kHz	-91	-96
10 kHz to 100 kHz	-101	-105
100 kHz to 1 MHz	-107	-110
1 MHz to 5 MHz	-108	-112
5 MHz to 10 MHz	-102	-106
10 MHz to 50 MHz	-102	-106
50 MHz to 100 MHz	-102	-106

[1]May be degraded at 100 MHz due to spurious receiver residuals.

Table 77. 0.1 dB Compression, All Options, All Ports - Typical

Description	Test Port Power (dBm)
10 MHz to 10 GHz[1]	15
10 GHz to 50 GHz	13

[1] With Option 425 installed and LFE disabled, applied to frequencies ≤ 100 MHz. Above 100 MHz, performance is the same for both LFE enabled or disabled. For LFE enabled performance ≤ 100 MHz, see Table Table 78.

Table 78. 0.1 dB Compression, All Ports, Option 425 (LFE Enabled) - Typical

Description	Test Port Power (dBm)
500 Hz to 900 Hz	13
900 Hz to 1 kHz	13
1 kHz to 10 kHz	13
10 kHz to 100 kHz	13
100 kHz to 1 MHz	13
1 MHz to 5 MHz	11
5 MHz to 10 MHz	13
10 MHz to 50 MHz	14
50 MHz to 100 MHz	14

Table 79. Compression, All Ports, Option 425 (LFE Enabled)- Specification

Description	Test Port Power (dBm)	Receiver Compression	
	All Options	Magnitude (dB)	Phase (degrees)
500 Hz to 900 Hz	--	--	--
900 Hz to 1 kHz	10	0.2	1
1 kHz to 10 kHz	12	0.2	1
10 kHz to 100 kHz	12	0.2	1
100 kHz to 1 MHz	12	0.2	1
1 MHz to 5 MHz	10	0.2	1
5 MHz to 10 MHz	9	0.2	1
10 MHz to 50 MHz	8	0.2	1
50 MHz to 100 MHz	8	0.2	1

Table 80. Compression, All Ports - Specification

Description	Test Port Power			Receiver compression	
	Options 201, 401	Options 21x, 41x	Options 22x, 42x	Magnitude (dB)	Phase (degree)
500 MHz to 10 GHz[1]	13	13	13	0.15	1.5
10 GHz to 13.5 GHz	13	11	10	0.15	1.5
13.5 GHz to 20 GHz	13	9	9	0.15	1.5
20 GHz to 26.5 GHz	13	9	9	0.18	1.5
26.5 GHz to 32 GHz	13	9	8	0.18	1.5
32 GHz to 40 GHz	9	8	8	0.18	1.5
40 GHz to 43.5 GHz	8	8	8	0.18	1.5
43.5 GHz to 45 GHz	8	8	8	0.2	1.5
45 GHz to 47 GHz	6	6	6	0.2	1.5
47 GHz to 50 GHz	5	1	0	0.2	1.5

[1] Test port receiver compression at input levels below 500 MHz is negligible due to coupler roll off.

Table 81. Trace Noise[1] Magnitude (dB rms), All Options, All Ports

Description	Specification	Typical		
	1 kHz IFBW	1 kHz IFBW	100 kHz IFBW	600 kHz IFBW
10 MHz to 50 MHz[2]	0.200	0.08	0.800	2.000
50 MHz to 100 MHz[2]	0.030	0.013	0.120	0.300
100 MHz to 500 MHz	0.020	0.005	0.050	0.150
500 MHz to 1 GHz	0.003	0.002	0.012	0.030
1 GHz to 26.5 GHz	0.002	0.002	0.011	0.026
26.5 GHz to 43.5 GHz	0.003	0.002	0.011	0.026
43.5 GHz to 50 GHz	0.004	0.002	0.011	0.026

[1] Ratioed measurement, nominal power at test port.
[2] With Option 425 installed and LFE disabled, applied to frequencies ≤ 100 MHz. Above 100 MHz, performance is the same for both LFE enabled or disabled. For LFE enabled performance ≤ 100 MHz, see Table 82.

Table 82. Trace Noise[1] Magnitude (dB rms), All Ports, Option 425 (LFE Enabled)

Description	Specification		Typical			
	100 Hz IFBW	1 kHz IFBW	100 Hz IFBW	1 kHz IFBW	100 kHz IFBW	600 kHz IFBW
500 Hz to 900 Hz	--	--	0.002	--	--	--
900 Hz to 4 kHz	0.004	--	0.001	--	--	--
4 kHz to 300 kHz	--	0.004	--	0.002	--	--
300 kHz to 2 MHz	--	0.004	--	0.001	0.01	--
2 MHz to 100 MHz	--	0.004	--	0.001	0.01	0.025

[1] Ratioed measurement, -5 dBm at test port.

Table 83. Trace Noise[1] Phase (deg rms), All Options, All Ports

Description	Specification	Typical		
	1 kHz IFBW	1 kHz IFBW	100 kHz IFBW	600 kHz IFBW
10 MHz to 50 MHz[2]	1	0.6	6	14
50 MHz to 100 MHz[2]	1	0.1	1	1.8
100 MHz to 500 MHz	0.5	0.035	0.35	1.0
500 MHz to 1 GHz	0.02	0.009	0.1	0.25
1 GHz to 26.5 GHz	0.02	0.009	0.08	0.18
26.5 GHz to 50 GHz	0.03	0.015	0.09	0.2

[1] Ratioed measurement, nominal power at test port.
[2] With Option 425 installed and LFE disabled, applied to frequencies ≤ 100 MHz. Above 100 MHz, performance is the same for both LFE enabled or disabled. For LFE enabled performance ≤ 100 MHz, see Table 84.

Table 84. Trace Noise[1] Phase (deg rms), All Ports, Option 425 (LFE Enabled)

Description	Specification		Typical			
	100 Hz IFBW	1 kHz IFBW	100 Hz IFBW	1 kHz IFBW	100 kHz IFBW	600 kHz IFBW
500 Hz to 900 Hz	--	--	0.012	--	--	--
900 Hz to 4 kHz	0.03	--	0.008	--	--	--
4 kHz to 300 kHz	--	0.03	--	0.014	--	--
300 kHz to 2 MHz	--	0.03	--	0.007	0.064	--
2 MHz to 100 MHz	--	0.03	--	0.007	0.068	0.166

[1] Ratioed measurement, -5 dBm at test port.

Table 85. Reference Level - Specification

Description	Magnitude (dB)	Phase (°)
Range	±500	±500
Resolution	0.001	0.01

Table 86. Stability[1] - Typical

Description	Magnitude (dB/°C)	Phase (°/°C)
10 MHz to 50 MHz[2]	0.02	0.3
50 MHz to 3.2 GHz[2]	0.01	0.15
3.2 GHz to 10 GHz	0.01	0.2
10 GHz to 16 GHz	0.01	0.25
16 GHz to 20 GHz	0.015	0.3
20 GHz to 26.5 GHz	0.015	0.4
26.5 GHz to 32 GHz	0.02	0.55
32 GHz to 40 GHz	0.025	0.7
40 GHz to 47 GHz	0.025	0.75
47 GHz to 50 GHz	0.03	0.8

[1] Stability is defined as a ratio measurement made at the test port.
[2] With Option 425 installed and LFE disabled, applied to frequencies ≤ 100 MHz. Above 100 MHz, performance is the same for both LFE enabled or disabled. For LFE enabled performance ≤ 100 MHz, see Table 87.

Table 87. Stability[1], Option 425 (LFE Enabled) - Typical

Description	Magnitude (dB/°C)	Phase (°/°C)
500 Hz to 900 Hz	0.010	0.2
900 Hz to 1 kHz	0.010	0.2
1 kHz to 10 kHz	0.010	0.2
10 kHz to 100 kHz	0.010	0.2
100 kHz to 1 MHz	0.010	0.1
1 MHz to 5 MHz	0.010	0.1
5 MHz to 10 MHz	0.010	0.1
10 MHz to 50 MHz	0.010	0.1
50 MHz to 100 MHz	0.020	0.1

[1] Stability is defined as a ratio measurement made at the test port.

Table 88. Damage Input Level - Specification

Description	RF (dBm)	DC (V)
Test Ports 1, 2, 3, 4	> +30	> 40
Test Ports 1, 2, 3, 4 (Options 217, 222, 417, 422)	> +30	> 7
Source 2 Out 1, Source 2 Out 2 (Option 22x only)	> +30	> 0
Test Port 1, Noise Mode[1] (Option 029 only)	> +10	> 40
Test Port 2, Noise Mode[1] (Option 029 without Option 425)	> +27	> 40
Test Ports (Option 425)	> +20	> 50

[1] Noise mode sets port 1 impedance tuner switch to internal tuner position and port 2 noise receiver switch to noise receiver position.

Noise Receiver Input (Option 029 only)

Table 89. Noise Receiver Bandwidth

Description	Allowable Bandwidths
10 MHz to 25 MHz	800 kHz, 2 MHz
25 MHz to 60 MHz	800 kHz, 2/4 MHz
60 MHz to 150 MHz	800 kHz, 2/4/8 MHz[1]
150 MHz to 50 GHz	800 kHz, 2/4/8/24 MHz[1]

[1] 8 and 24 MHz bandwidths are available only with calibration using noise source.

Table 90. Receiver Noise Figure (dB), Port 2, at 4 MHz BW, High Gain Setting

Description	Specification	Typical
10 MHz to 50 MHz	--	9
50 MHz to 1.5 GHz	10	7
1.5 GHz to 5 GHz	12	10
5 GHz to 20 GHz	15	11
20 GHz to 45 GHz	16	11
45 GHz to 50 GHz	21	14

Table 91. Receiver Noise Figure (dB), Port 2, @ 4 MHz BW, High Gain Setting, Option 425 with 029

Description	Specification	Typical
10 MHz to 50 MHz	--	9
50 MHz to 1.5 GHz	15.5	12.5
1.5 GHz to 5 GHz	14	12
5 GHz to 20 GHz	16	12
20 GHz to 45 GHz	16	11
45 GHz to 50 GHz	21	14

Table 92. Noise Figure Trace Noise[1] (dB rms) at 4 MHz BW, All Gain Settings

Description	Specification	Typical
10 MHz to 50 MHz	--	0.07
50 MHz to 50 GHz	0.11	0.07

[1] Trace noise magnitude performance on noise figure trace or sometimes called noise jitter, 201 points, 1 noise average, with terminated input. May typically be degraded at frequencies below 500 MHz due to spurious noise receiver residuals.

Table 93. Noise Receiver Linearity (dB) at 4 MHz BW - Specification

Power Range (dBm)			Specification
Low Gain Setting Reference to -60dBm	Medium Gain Setting Reference to -70 dBm	High Gain Setting Reference to -80 dBm	
-39 to -64	-50 to -76	-58 to -85	±0.05
-64 to -70	-76 to -87	-85 to -92	±0.07

Table 94. Noise Receiver Input Range - Specification

Description	Max DUT NF + Gain (dB)[1]			Max Input Power (dBm) for <0.1 dB Compression[2]		
	High Gain Setting	Medium Gain Setting	Low Gain Setting	High Gain Setting	Medium Gain Setting	Low Gain Setting
500 MHz to 4.5 GHz	37	53	68	≤-51	≤-35	≤-20
4.5 GHz to 6 GHz	38	53	71	≤-50	≤-35	≤-17
6 GHz to 24 GHz	47	57	66	≤-41	≤-31	≤-22
24 GHz to 26.5 GHz	45	58	66	≤-43	≤-30	≤-22
26.5 GHz to 36 GHz	45	56	57	≤-43	≤-32	≤-31
36 GHz to 50 GHz	39	51	58	≤-49	≤-37	≤-30

[1] Limited by 0.1 dB receiver compression. Applies to devices with bandwidth <400 MHz. For devices with higher bandwidths, calculate the DUT output noise power as -174 dBm + 10*log10(B) + Gain (dB) + NF (dB), where B is the bandwidth of the DUT in Hz, and use the Max Input Power specification.
[2] Derived from ensuring < 0.25 dB compression with a CW signal 5 dB higher than the stated max input power value for 0.1 dB compression. Referenced to test port 2.

Table 95. Noise Receiver Input Range, Option 425 with 029 - Specification

Description	Max DUT NF + Gain (dB)[1]			Max Input Power (dBm) for <0.1 dB Compression[2]		
	High Gain Setting	Medium Gain Setting	Low Gain Setting	High Gain Setting	Medium Gain Setting	Low Gain Setting
500 MHz to 4.5 GHz	37	53	68	≤-51	≤-35	≤-20
4.5 GHz to 6 GHz	38	53	71	≤-50	≤-35	≤-17
6 GHz to 24 GHz	47	57	66	≤-41	≤-31	≤-22
24 GHz to 26.5 GHz	45	58	66	≤-43	≤-30	≤-22
26.5 GHz to 36 GHz	45	56	57	≤-43	≤-32	≤-31
36 GHz to 50 GHz	39	51	58	≤-50	≤-38	≤-30

[1] Limited by 0.1 dB receiver compression. Applies to devices with bandwidth <400 MHz. For devices with higher bandwidths, calculate the DUT output noise power as -174 dBm + 10*log10(B) + Gain (dB) + NF (dB), where B is the bandwidth of the DUT in Hz, and use the Max Input Power specification.
[2] Derived from ensuring < 0.25 dB compression with a CW signal 5 dB higher than the stated max input power value for 0.1 dB compression. Referenced to test port 2.

Phase Noise Measurement Performance (with S930317B phase noise measurement application)[1]

- Offset frequency range: 0.1 Hz to 10 MHz
- Sweep speed (typical): 34 seconds (1 Hz to 10 MHz offset in Normal mode)

Table 96. Absolute Phase Noise Sensitivity (dBc/Hz), in Best mode - Supplemental Performance Data [2]

Input Power level: +5 dBm (-5 dBm at 50 GHz)

Phase Noise	Offset Frequency								
Input Frequency	1 Hz	10 Hz	100 Hz	1 kHz	10 kHz	100 kHz	300 kHz	1 MHz	10 MHz
1 GHz	-55	-88	-112	-127	-132	-134	-134	-134	-134
10 GHz	-36	-69	-97	-117	-124	-130	-132	-136	-137
20 GHz	-31	-64	-90	-111	-120	-124	-125	-132	-134
40 GHz	-23	-58	-84	-104	-113	-117	-123	-125	-129
50 GHz	-18	-54	-81	-100	-109	-113	-116	-121	-123

Table 97. Absolute AM Noise Sensitivity (dBc/Hz), in Best mode - Supplemental Performance Data

Input Power level: +5 dBm (-5 dBm at 50 GHz)

AM Noise	Offset Frequency								
Input Frequency	1 Hz	10 Hz	100 Hz	1 kHz	10 kHz	100 kHz	300 kHz	1 MHz	10 MHz
1 GHz	-96	-104	-110	-119	-128	-132	-132	-135	-137
10 GHz	-97	-104	-110	-118	-128	-134	-135	-138	-139
20 GHz	-96	-104	-112	-116	-125	-132	-129	-136	-136
40 GHz	-93	-102	-109	-114	-123	-127	-130	-130	-132
50 GHz	-91	-96	-105	-114	-119	-122	-117	-125	-122

1 The input frequency in the sensitivity tables in this section is limited to the highest frequency of the PNA-X model.

2 For embedded-LO frequency converters, the frequency used for the table should be that of the embedded-LO.

Absolute Phase Noise Sensitivity (dBc/Hz) - Supplemental Performance Data

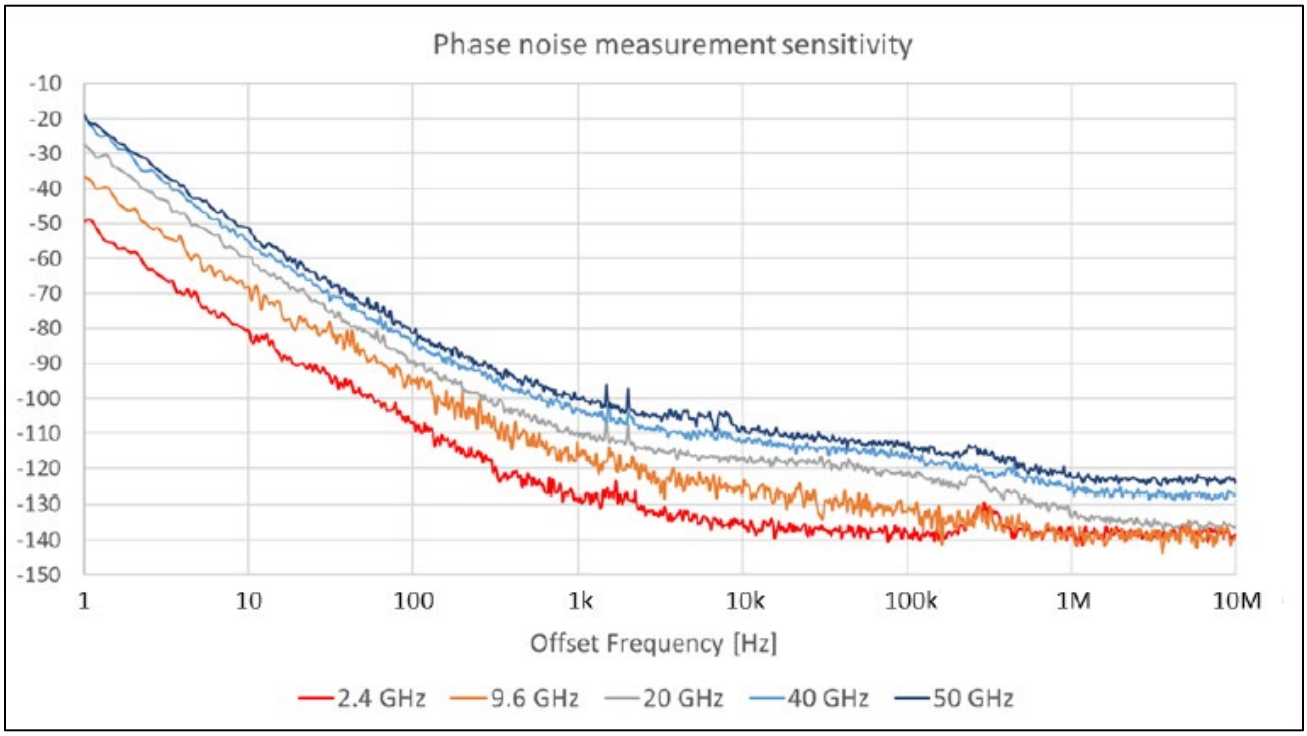

Single-Channel Residual Noise Measurement [3]

Table 98. Single-Channel Residual Phase Noise Sensitivity (dBc/Hz), with Option UNY in Best mode - Supplemental Performance Data

Input Power level: +10 dBm (+6 dBm at 40 GHz, -2 dBm at 50 GHz)

Residual Phase Noise	Offset Frequency								
Input Frequency	1 Hz	10 Hz	100 Hz	1 kHz	10 kHz	100 kHz	300 kHz	1 MHz	10 MHz
1 GHz	-102	-110	-115	-123	-131	-136	-136	-137	-137
10 GHz	-92	-99	-105	-113	-122	-131	-134	-139	-140
20 GHz	-83	-93	-100	-112	-118	-125	-124	-132	-136
40 GHz	-78	-85	-93	-106	-110	-122	-126	-128	-129
50 GHz	-75	-81	-91	-102	-110	-120	-119	-125	-125

Table 99. Single-Channel Residual AM Noise Sensitivity (dBc/Hz), with Option UNY in Best mode - Supplemental Performance Data

Input Power level: +10 dBm (+6 dBm at 40 GHz, -2 dBm at 50 GHz)

Residual AM Noise	Offset Frequency								
Input Frequency	1 Hz	10 Hz	100 Hz	1 kHz	10 kHz	100 kHz	300 kHz	1 MHz	10 MHz
1 GHz	-97	-104	-112	-120	-117	-128	-130	-134	-138
10 GHz	-97	-106	-111	-120	-121	-129	-134	-137	-142
20 GHz	-99	-104	-112	-120	-123	-120	-123	-130	-136
40 GHz	-96	-102	-110	-117	-118	-128	-132	-131	-133
50 GHz	-91	-99	-109	-114	-120	-125	-118	-125	-127

3 The data is when a THRU device is connected, in other words, when the input and output frequencies are the same. The single-channel residual noise measurement is used for the phase noise measurements for frequency converting devices, and the sensitivity is determined as the absolute phase noise sensitivity at the embedded-LO frequency (Table 96). In the single-channel residual noise measurement mode, the phase or AM noise of the DUT input signal is not measured. The measurement can be done when the phase or AM noise of the signal generated by the DUT is larger than that of the DUT input signal supplied by the PNA internal signal source.

Single-Channel Residual Phase Noise Sensitivity (dBc/Hz) - Supplemental Performance Data

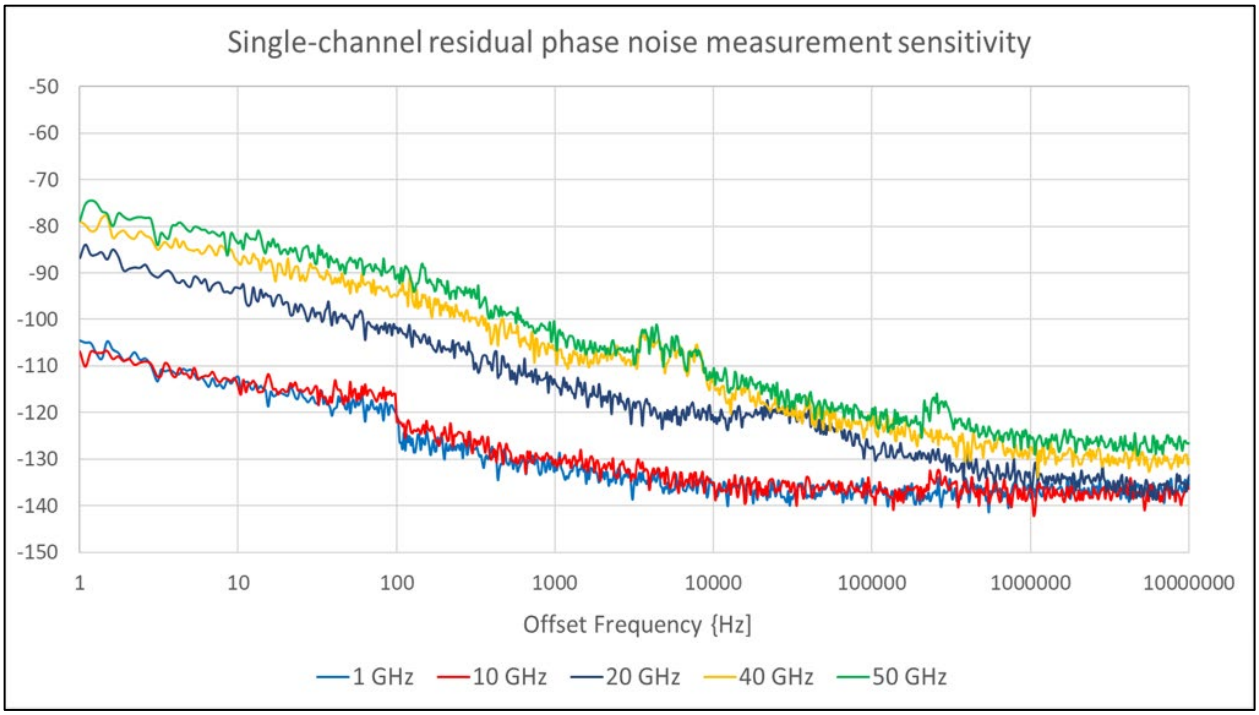

Table 100. Single-Channel Residual Phase Noise Sensitivity (dBc/Hz), without Option UNY in Best mode - Supplemental Performance Data [4]

Input Power level: +10 dBm (+6 dBm at 40 GHz, 0 dBm at 50 GHz)

Residual Phase Noise	Offset Frequency								
Input Frequency	1 Hz	10 Hz	100 Hz	1 kHz	10 kHz	100 kHz	300 kHz	1 MHz	10 MHz
1 GHz	-94	-95	-100	-120	-133	-136	-138	-137	-136
10 GHz	-77	-78	-83	-102	-114	-124	-129	-135	-138
20 GHz	-70	-74	-75	-95	-109	-118	-127	-128	-133
40 GHz	-64	-67	-70	-92	-102	-112	-116	-121	-128
50 GHz	-61	-63	-66	-87	-101	-109	-113	-119	-125

Table 101. Single-Channel Residual AM Noise Sensitivity (dBc/Hz), without Option UNY in Best mode - Supplemental Performance Data

Input Power level: +10 dBm (+6 dBm at 40 GHz, 0 dBm at 50 GHz)

Residual AM Noise	Offset Frequency								
Input Frequency	1 Hz	10 Hz	100 Hz	1 kHz	10 kHz	100 kHz	300 kHz	1 MHz	10 MHz
1 GHz	-105	-110	-123	-125	-134	-138	-139	-143	-138
10 GHz	-104	-110	-116	-125	-133	-134	-133	-141	-141
20 GHz	-104	-109	-116	-127	-127	-126	-128	-133	-137
40 GHz	-103	-110	-115	-125	-120	-130	-126	-130	-132
50 GHz	-98	-106	-111	-121	-124	-125	-122	-129	-129

4 The data is when a THRU device is connected, in other words, when the input and output frequencies are the same. The single-channel residual noise measurement is used for the phase noise measurements for frequency converting devices, and the sensitivity is determined as the absolute phase noise sensitivity at the embedded-LO frequency (Table 96). In the single-channel residual noise measurement mode, the phase or AM noise of the DUT input signal is not measured. The measurement can be done when the phase or AM noise of the signal generated by the DUT is larger than that of the DUT input signal supplied by the PNA internal signal source.

2-Channel Residual Noise Measurement for Non-Frequency Converting Devices[5]

Table 102. 2-Channel Residual Phase Noise Sensitivity (dBc/Hz) in Best mode - Supplemental Performance Data

Input Power level: +10 dBm (+6 dBm at 40 GHz, -3 dBm at 50 GHz)

Residual Phase Noise	Offset Frequency								
Input Frequency	1 Hz	10 Hz	100 Hz	1 kHz	10 kHz	100 kHz	300 kHz	1 MHz	10 MHz
1 GHz	-107	-116	-127	-134	-132	-134	-131	-133	-132
10 GHz	-101	-110	-120	-126	-134	-135	-134	-138	-136
20 GHz	-99	-105	-113	-120	-128	-131	-129	-134	-135
40 GHz	-93	-101	-109	-115	-121	-124	-125	-126	-127
50 GHz	-90	-99	-106	-113	-117	-118	-119	-120	-120

Table 103. 2-Channel Residual AM Noise Sensitivity (dBc/Hz) in Best mode - Supplemental Performance Data

Input Power level: +10 dBm (+6 dBm at 40 GHz, -3 dBm at 50 GHz)

Residual AM Noise	Offset Frequency								
Input Frequency	1 Hz	10 Hz	100 Hz	1 kHz	10 kHz	100 kHz	300 kHz	1 MHz	10 MHz
1 GHz	-99	-106	-109	-120	-131	-133	-138	-137	-134
10 GHz	-95	-105	-113	-121	-130	-134	-136	-139	-139
20 GHz	-96	-104	-113	-120	-129	-128	-129	-136	-136
40 GHz	-98	-107	-112	-118	-120	-127	-129	-130	-131
50 GHz	-93	-102	-110	-115	-120	-121	-119	-122	-122

5 Both the phase or AM noise of the DUT input signal and that of the DUT output signal are measured.

2-Channel Residual Phase Noise Sensitivity (dBc/Hz) - Supplemental Performance Data

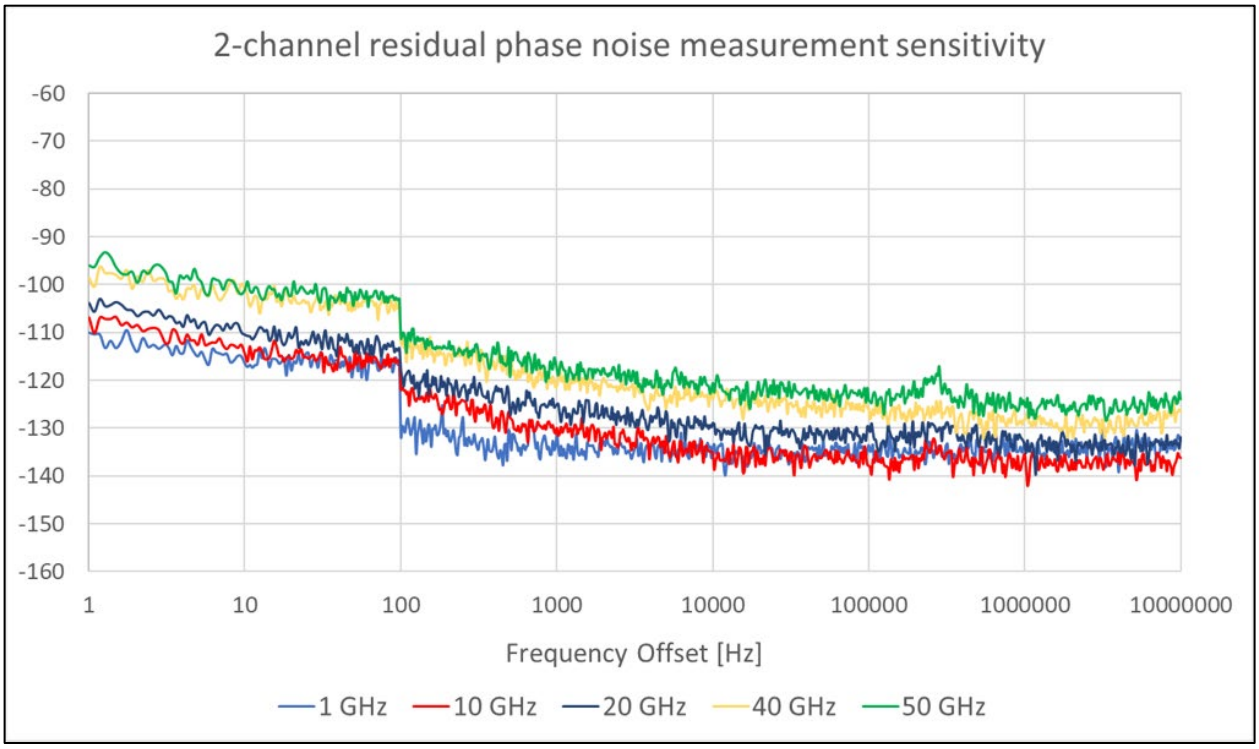

Dynamic Accuracy

Table 104. Dynamic Accuracy - Specification

Standard receiver accuracy of the test port input power reading relative to the reference input power level. It is verified with the following measurements:

- Compression over frequency
- IF linearity at a single frequency of 99.6 MHz or 1.998765 GHz using a reference level of -20 dBm for an input power range of 0 to -60 dBm. For value below -60 dBm, refer to “VNA Receiver Dynamic Accuracy Specifications and Uncertainties”.

Applies to the N5244B and N5245B with the following serial numbers.

N5244B and N5244BS: MY5244/SG5244/US5244 and above
N5245B and N5245BS: MY5245/SG5245/US5245 and above

Please download our free Uncertainty Calculator from http://www.keysight.com/find/na_calculator to generate the curves for your PNA.

Dynamic Accuracy, 900 Hz (LFE Enabled) - Specification

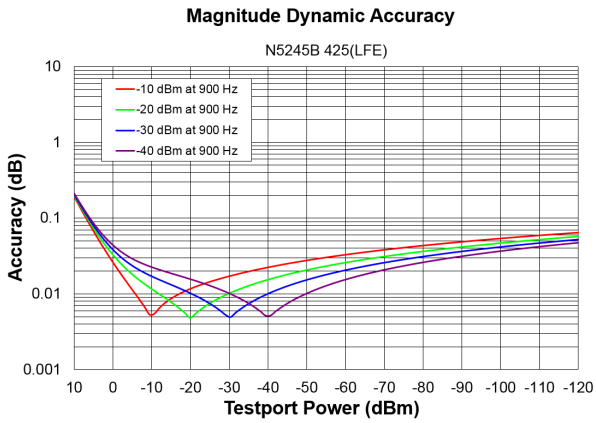

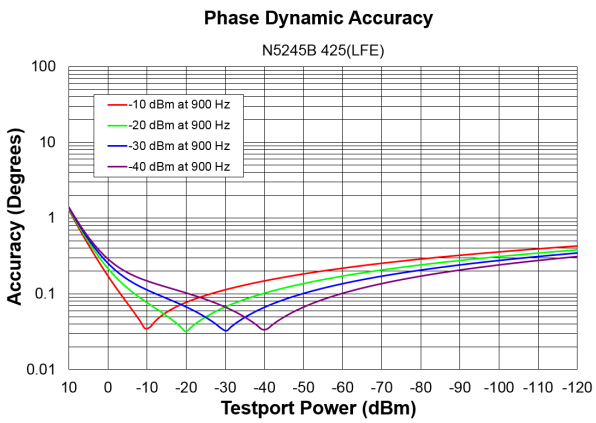

Dynamic Accuracy, 10 MHz (LFE Enabled) - Specification

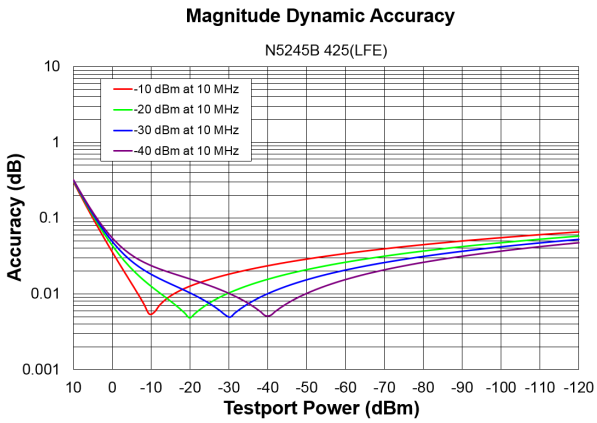

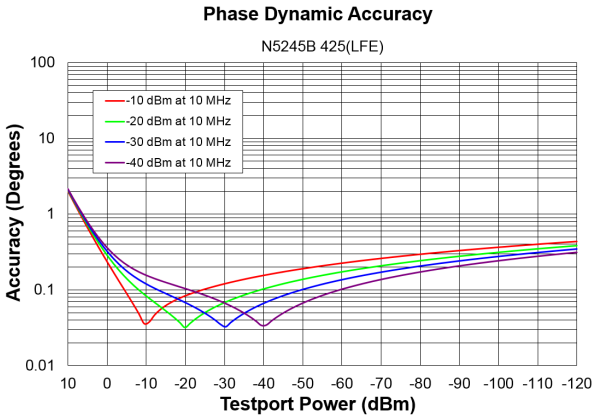

Dynamic Accuracy, 100 MHz (LFE Enabled) - Specification

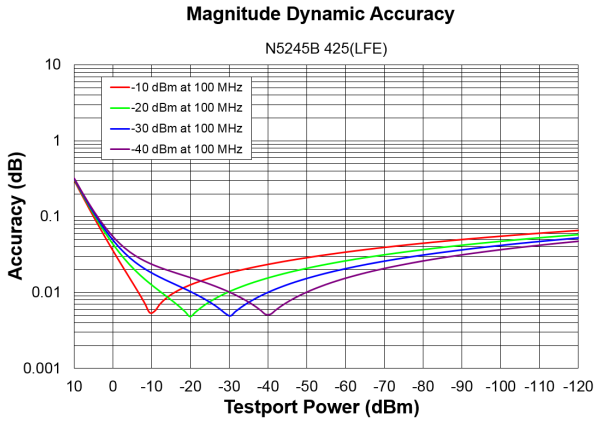

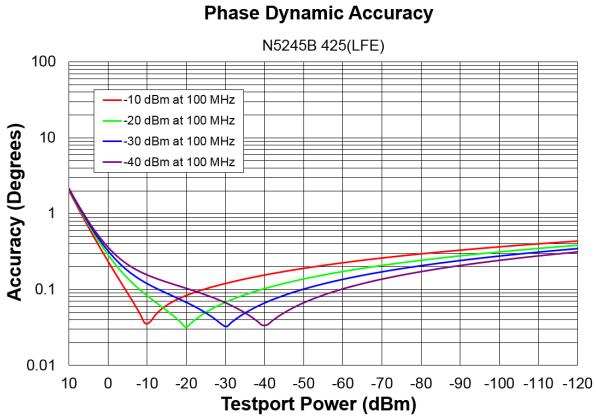

Dynamic Accuracy, 10 MHz

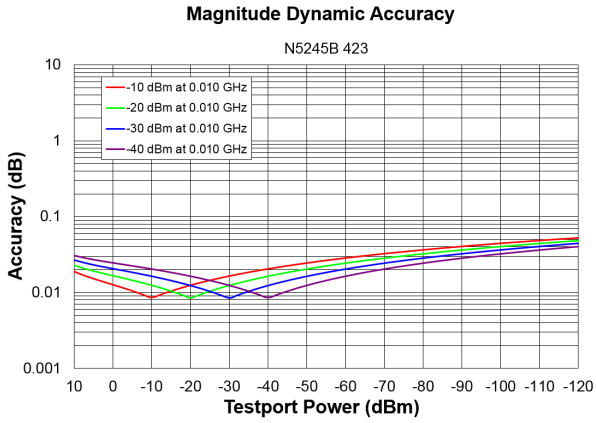

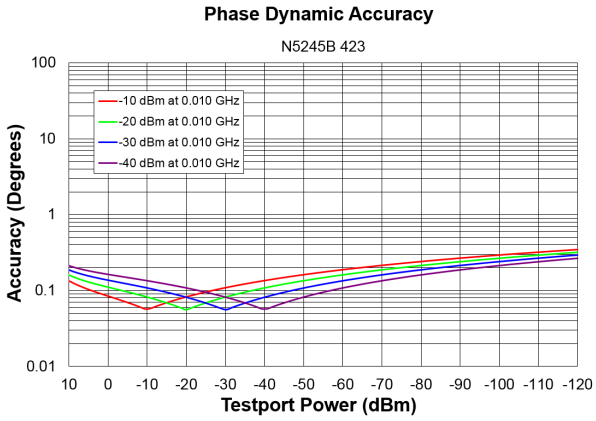

Dynamic Accuracy, 50 MHz

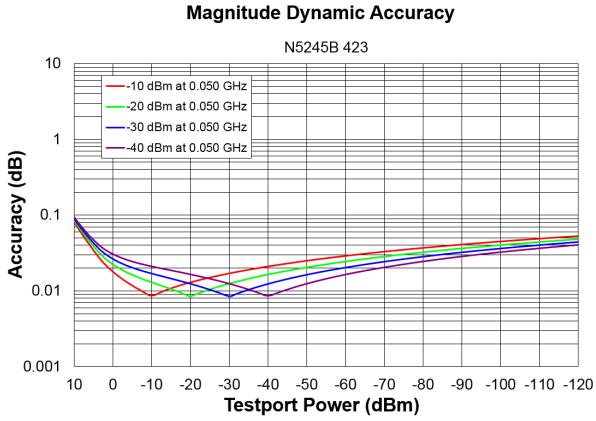

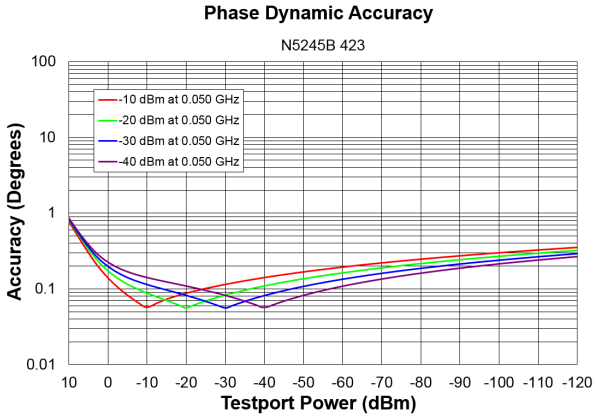

Dynamic Accuracy, 500 MHz

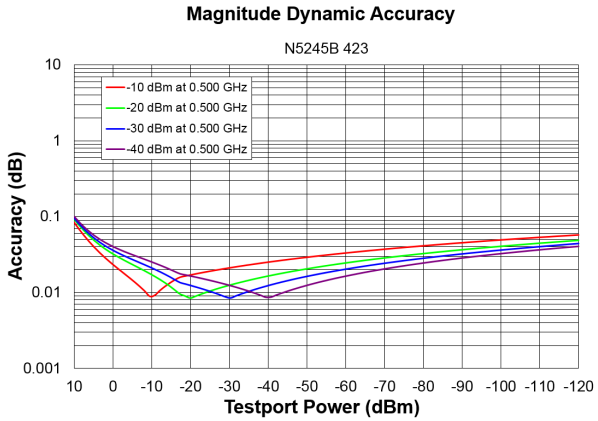

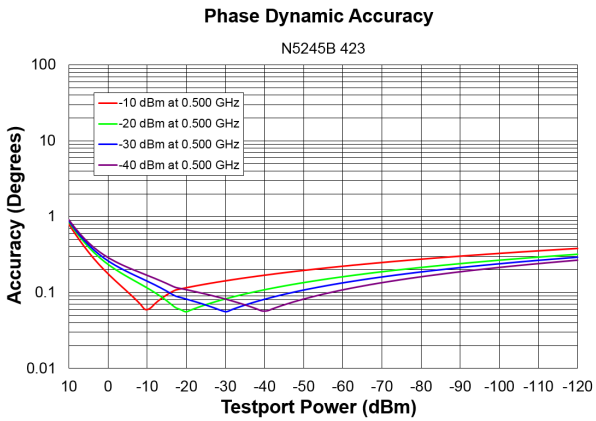

Dynamic Accuracy, 1 GHz

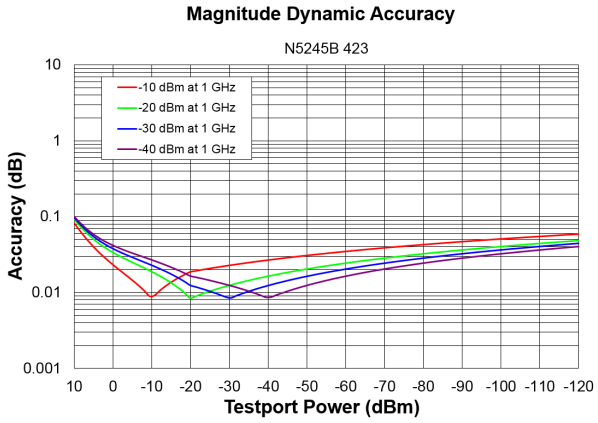

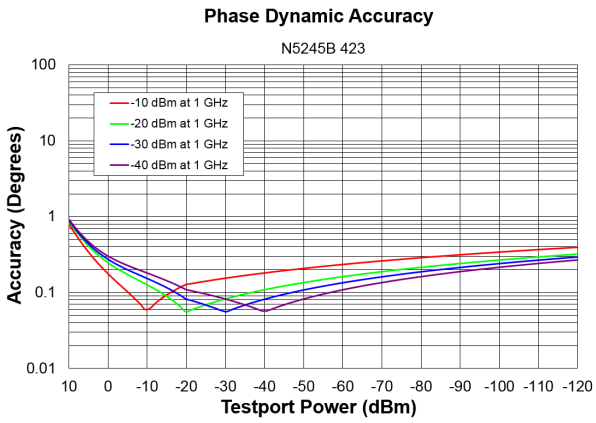

Dynamic Accuracy, 2 GHz

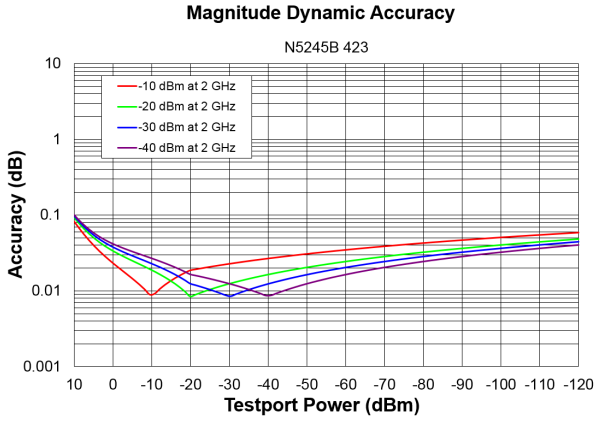

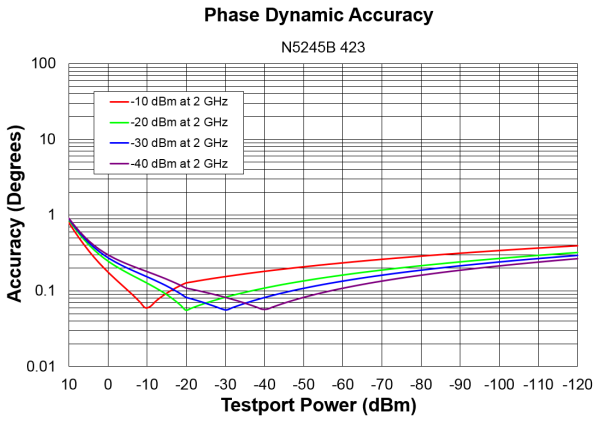

Dynamic Accuracy, 10 GHz

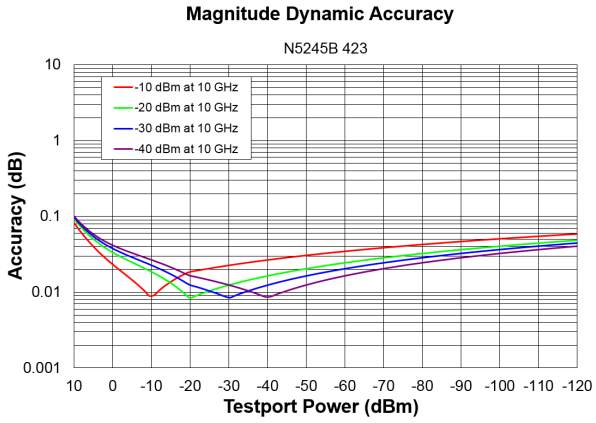

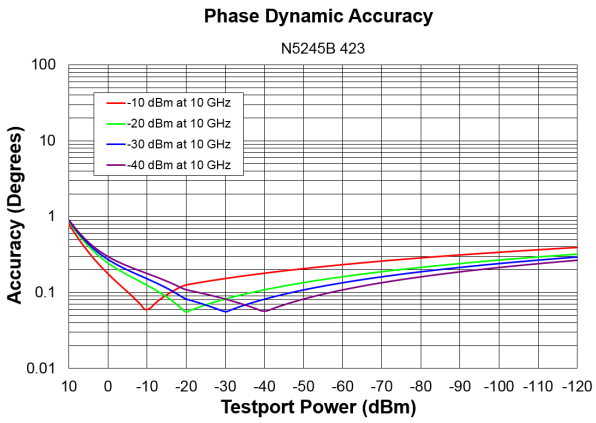

Dynamic Accuracy, 20 GHz

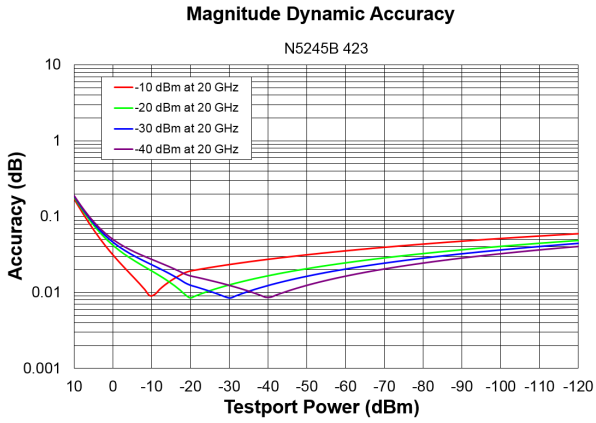

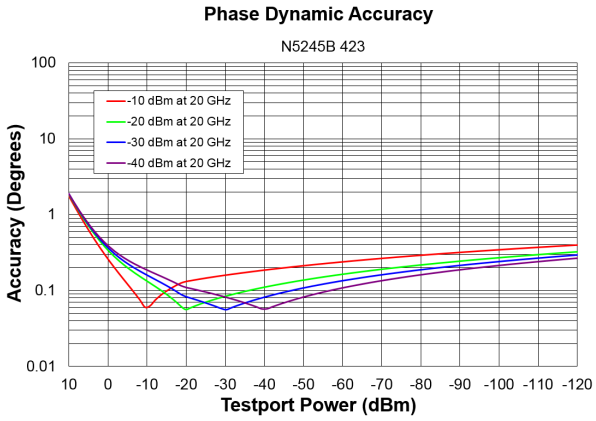

Dynamic Accuracy, 30 GHz

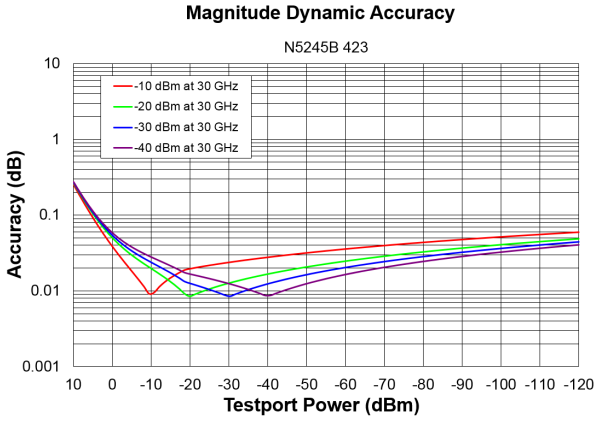

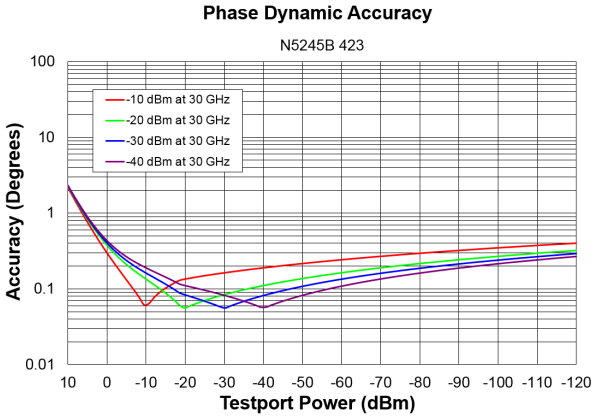

Dynamic Accuracy, 43.5 GHz

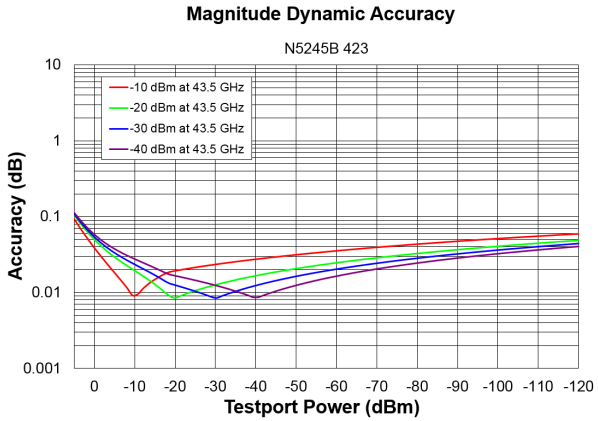

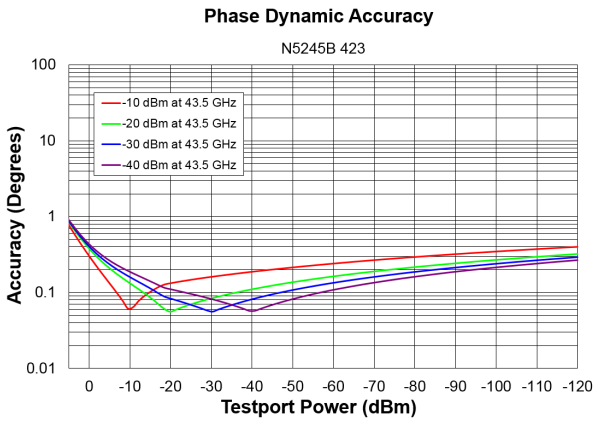

Dynamic Accuracy, 50 GHz

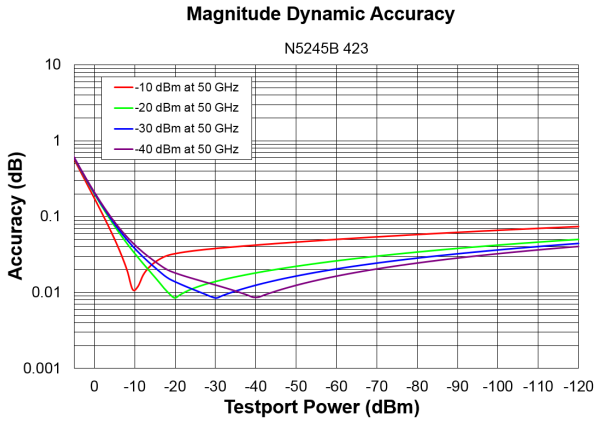

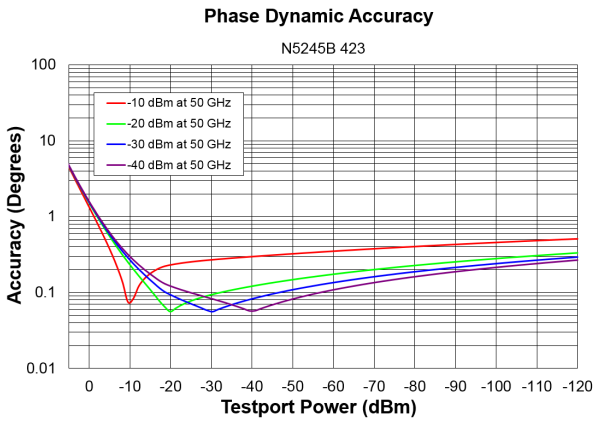

Table 105. Test Port Input (Group Delay)[1]

Description	Typical Performance
Aperture (selectable)	(frequency span)/(number of points -1)
Maximum Aperture	20% of frequency span
Range	0.5 x (1/minimum aperture)
Maximum Delay	Limited to measuring no more than 180° of phase change within the minimum aperture.)
Accuracy	See graph below. Char.

The following graph shows characteristic group delay accuracy with full 2-port calibration and a 10 Hz IF bandwidth. Insertion loss is assumed to be < 2 dB and electrical length to be ten meters.
For any S_{ij} Group Delay measurement, $S_{ii} = 0$, $S_{ij} = 1$, $S_{ji} = 0$, $S_{kl} = 0$ for all $kl \neq ij$

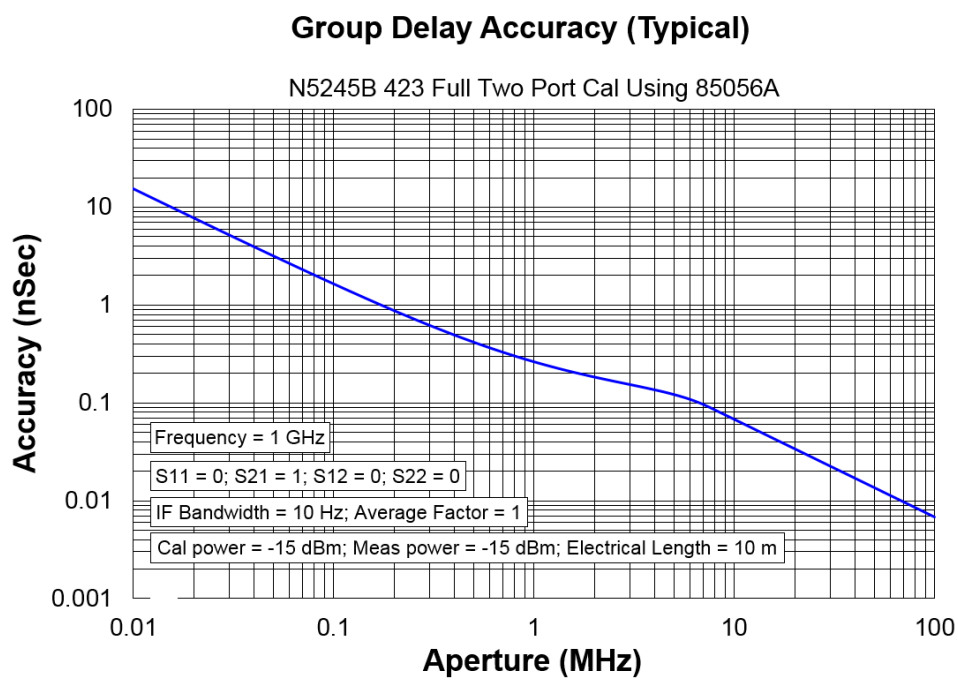

In general, the following formula can be used to determine the accuracy, in seconds, of specific group delay measurement:
±Phase Accuracy (deg)/[360 × Aperture (Hz)]
Depending on the aperture and device length, the phase accuracy used is either incremental phase accuracy or worst-case phase accuracy.

[1] Group delay is computed by measuring the phase change within a specified frequency step (determined by the frequency span and the number of points per sweep).

General Information

Table 106. Miscellaneous Information

Description	Supplemental Information	
System IF Bandwidth Range	1 Hz to 15 MHz, nominal (7 MHz, 10 MHz, and 15 MHz IFBWs are available ONLY with FW A.09.42 and later, and with DSP version 5)	
CPU	For the latest information on CPUs and associated hard drives, visit: PNA Hard Drives and CPUs (keysight.com)	
LXI	CPU version 7.0, 8.0	CPU version 9.0
	Class C	LXI 1.5 Extended Functions: HiSLIP; VSI-11 Discovery and Identification
Maximum Number of Points	100003	

Table 107. Front Panel Information, All Options

Description	Typical Performance
RF Connectors	
Test Ports	2.4 mm (male), 50 ohm (nominal), 0.002 in. Center Pin Recession (characteristic)
Jumpers	2.4 mm (female) connectors with 2.4 mm (male) jumper cables
USB 2.0 Ports - Primary (4 ports)	
Standard	Compatible with USB 2.0
Connector	USB Type-A female
Display	
Size	31 cm (12.1 in) diagonal color active matrix LCD; 1280 (horizontal) X 800 (vertical) resolution
Refresh Rate	Vertical 60 Hz; Horizontal 49.31 kHz
Pixels	Any of the following would cause a display to be considered faulty: • A complete row or column consists of “stuck” or “dark” pixels. • More than six “stuck on” pixels (but not more than three green) or more than 0.002% of the total pixels are within the LCD specifications. • More than twelve “dark” pixels (but no more than seven of the same color) or more than 0.004% of the total pixels are within the LCD specifications. • Two or more consecutive "stuck on" pixels or three or more consecutive "dark" pixel (but no more than one set of two consecutive dark pixels). • “Stuck on” pixels or more than two “dark” pixels less than 6.5 mm apart (excluding consecutive pixels).

Description	Typical Performance
Display Range	
Magnitude	±2500 dB (at 500 dB/div), max
Phase	±2500° (at 500 degrees/div), max
Polar	10 pUnits, min 10,000 Units, max
Display Resolution	
Magnitude	0.001 dB/div, min
Phase	0.01°/div, min
Marker Resolution	
Magnitude	0.001 dB, min
Phase	0.01°, min
Polar	10 pUnit, min

Table 108. Rear Panel Information, All Options

Description	Typical Performance
10 MHz Reference In	
Connector	BNC, female
Input Frequency	10 MHz ±1 ppm, 100 MHz ±1 ppm 20 MHz ±1 ppm, 80 MHz ±1 ppm
Input Level	10 MHz: -15 dBm to +20 dBm 100 MHz: -10 dBm to +20 dBm
Input Impedance	50 Ω, nom.
10 MHz Reference Out	
Connector	BNC, female
Output Frequency	10 MHz ±0.7 ppm, 100 MHz ±0.7 ppm
Signal Type	Sine Wave
Output Level	+10 dBm ±4 dB into 50 Ω
Output Impedance	50 Ω, nominal
Harmonics	<-40 dBc, typical
SRC3 (Option XSB)	
Connector	SMA, female
Output Frequency	10 MHz to 13.5 GHz
Typical Output Power Range	See Table 49
External IF Inputs	
Function	Allows use of external IF signals from remote mixers, bypassing the PNA's first converters
Connectors	SMA (female); A, B, C, D, R (4-port); A, B, R1, R2 (2-port)

Description	Typical Performance			
Frequency				
Path	DSP Version	IF Bandwidth	RF Frequency	IF Frequency
Normal IF path:	4	All	< 53 MHz	2.535211 MHz
		All	>= 53 MHz	7.605634 MHz
	5	≤ 600 kHz	< 53 MHz	2.479339 MHz
			>= 53 MHz	7.438017 MHz
		1 MHz	All	7.692 MHz
		1.5 MHz	All	7.368 MHz
		2 MHz	All	8.450 MHz
		3 MHz	All	8.163 MHz
		5 MHz	All	6.897 MHz
		7 MHz	All	10.53 MHz
		10 MHz	All	15.38 MHz
`		15 MHz	All	22.22 MHz
Narrowband IF path:	4 or 5	All	All	10.70 MHz
Input Impedance	50 Ω			
RF Damage Level	+23 dBm			
DC Damage Level	5.5 VDC			
0.1 dB Compression Point				
Normal IF path	-9.0 dBm at 7.438 MHz			
Narrowband IF path	-17 dBm at 10.70 MHz			
Pulse I/O Connector	15-pin mini D-sub (for pin assignment information, refer to the PNA online help)			
Pulse Inputs (IF Gates)				
Function	Internal receiver gates used for point-in-pulse and pulse-profile measurements			
Input Impedance	1 K Ohm			
Source Modulators	20 ns minimum pulse width			
Receiver Gates	20 ns minimum pulse width			
DC Damage Level	5.5 VDC			
Drive Voltage	0 V (off), +3.3 V (on), nominal			
RF Pulse Modulator Input (Source Modulator)				
On/Off Ratio				
10 MHz to 3.2 GHz	-64 dB			
3.2 GHz to 50 GHz	-80 dB			
Pulse Period				
Minimum	20 ns			
Maximum	70 s			
Pulse Outputs				
Voltage (TTL)	High: 3.3V to 3.5V Low: <1V			
Impedance	50 Ohm			

Description	Typical Performance	
External Test Set Driver		
Function	Used for driving remote mixers	
Connections	3.5 mm (female)	
RF Output Frequency Range	3.2 GHz to 19 GHz	
LO Output Frequency Range	0.01 GHz to 26.5 GHz	
Rear Panel LO Power	**Upper Limit, Typical (dBm)**	**Lower Limit, Typical (dBm)**
10 MHz to 1.7 GHz	--	--
1.7 GHz to 6.78 GHz	5	-3
6.78 GHz to 15.4 GHz	0	-6
15.4 GHz to 26.5 GHz	4	-5
Rear Panel RF Power	**Upper Limit, Typical (dBm)**	**Lower Limit, Typical (dBm)**
3.2 GHz to 19 GHz	-3	-8
Bias Tee Inputs		
Connectors	BNC(f) for ports 1, 2, 3 and 4	
Fuse	500 mA, bi-pin style	
Maximum Bias Current	±200 mA with no degradation of RF specifications	
Maximum Bias Voltage	±40 VDC	
Other Rear Panel Interface		
Trigger Inputs/Outputs	BNC(f), TTL/CMOS compatible	
Test Set IO	25-pin D-Sub connector, available for external test set control	
Power IO	9-pin D-Sub, female; analog and digital IO	
Handler IO	36-pin parallel I/O port; all input/output signals are default set to negative logic; can be reset to positive logic via GPIB command	
GPIB	Two ports - dedicated controller and dedicated talker/listener. 24-pin D-sub (Type D-24), female; compatible with IEEE-488	
CPU Version	**CPU version 7.0, 8.0**	**CPU version 9.0**
PCIe	Cabled PCIe x4 connector is a 4-lane slot	N/A
USB Ports	Two SuperSpeed USB ports (900 mA each), one USB port below LAN connector, and one USB device port. There are also four USB ports (500 mA each) on the front panel. The total current limit for all rear panel USB ports is 2.3 amps. The total current limit for all front panel USB ports is 2 amps.	Four SuperSpeed USB ports (900 mA each) and one USB device port. There are also four USB ports (500 mA each) on the front panel. The total current limit for all rear panel USB ports is 3.6 amps. The total current limit for all front panel USB ports is 2 amps.
USB-C (Host)	N/A	Two USB-C connectors with support for USB-3.1 (max Power Delivery of 5V@1A), Thunderbolt3 (max Power Delivery of 5V@1A)[1], and Display Port (port TB1 only)
LAN	1G port; 10/100/1000 BaseT Ethernet, 8-pin configuration; auto selects between the data rates	1G and 10G ports; 10GBASE-T, Ethernet, 8-pin configuration; auto selects between the data rates. Works with Cat6/Cat7 cable.
VGA Video Output	15-pin mini D-Sub; Drives VGA compatible monitors	N/A

Description	Typical Performance	
Mini DisplayPort	Miniature DisplayPort connector for connection to external displays	N/A
DisplayPort	N/A	Standard DisplayPort connector for connection to external displays
Line Power		
Frequency, Voltage	50/60/400 Hz for 100/120 VAC 50/60 Hz for 220/240 VAC	
	Power supply is auto switching	
Max	575 watts	

[1] High power devices require external power supply.

Table 109. Analyzer Dimensions and Weight

All models are shipped with bottom feet, handles and front and rear hardware.

Cabinet Dimensions	Metric (mm)	Imperial (inches)
Height		
Without bottom feet:EIA RU[1] = 6	266.1	10.5
With bottom feet	279.1	11.0
Width		
Without handles or rack-mount flanges	425.6	16.8
With handles, without rack-mount flanges	458.7	18.1
With handles and rack-mount flanges	482.9	19.0
Depth		
Without front and rear panel hardware	582.3	22.9
With front and rear panel hardware, handles	649.6	25.6
Weight (nominal)	**Net**	**Shipping**
2-port models (Option 22x with 029)	46.3 kg (102 lb)	62.1 kg (137 lb)
4-port models (Option 42x with 029)	49.0 kg (108 lb)	65.3 kg (144 lb)

[1] Electronics Industry Association rack units. 1 RU = 1.75 in.

Regulatory and Environmental Information

For Regulatory and Environmental information, refer to the PNA Series Installation and Quick Start Guide, located online at http://literature.cdn.keysight.com/litweb/pdf/E8356-90001.pdf.

Measurement Throughput Summary

Cycle time Includes sweep time, retrace time and band-crossing time. Analyzer display turned off with DISPLAY:ENABLE OFF. Add 21 ms for display on. Data for one trace (S11) measurement. LF Auto BW off.

Table 110. Cycle Time (ms) for Measurement Completion, All Models, All Options - Typical

Sweep Range	IF Bandwidth		Number of Points				
			201	**401**	**1601**	**16001**	**32001**
9 GHz to 10 GHz	600 kHz	Uncorrected	3.7	4.4	8.2	54.1	104.3
		2-Port cal	7.7	8.7	16.6	109.2	210.8
	10 kHz	Uncorrected	28	52.8	202	1990	3977
		2-Port cal	56.1	105.9	404	3988	7949
	1 kHz	Uncorrected	201.5	401	1585	15814	31623
		2-Port cal	403	798	3171	31625	63385
10 GHz to 20 GHz	600 kHz	Uncorrected	13.5	13.7	14.8	60	110.6
		2-Port cal	27	27.5	29.7	120	218.5
	10 kHz	Uncorrected	43.9	81.9	206.8	1995	3983
		2-Port cal	87.6	163.7	413	3989	7961
	1 kHz	Uncorrected	204.5	403	1589	15817	31629
		2-Port cal	409	804	3176	31633	63401

Table 111. N5244B Cycle Time (ms) for Full-Span Measurement Completion - Typical

10 MHz to 43.5 GHz		Number of Points				
IF Bandwidth		**201**	**401**	**1601**	**16001**	**32001**
600 kHz	Uncorrected	38.2	52.4	78.5	118.8	169.6
	2-Port cal	73.8	107	149.7	227.3	329
10 kHz	Uncorrected	62.1	105	347	2151	4191
	2-Port cal	121.3	205	687	4290	8368
1 kHz	Uncorrected	222.8	426	1626	15969	31895
	2-Port cal	443	845	3244	31923	63929

Table 112. N5245B Cycle Time (ms) for Full-Span Measurement Completion - Typical

10 MHz to 43.5 GHz		Number of Points				
IF Bandwidth		201	401	1601	16001	32001
600 kHz	Uncorrected	39.6	52.6	82.2	121.1	171
	2-Port cal	76.7	102	158	233	332.3
10 kHz	Uncorrected	63.4	104.3	348	2145	4194
	2-Port cal	123.8	204.8	688	4279	8377
1 kHz	Uncorrected	224.3	425	1626	15953	31866
	2-Port cal	445	846	3245	31893	63866

Table 113. Cycle Time vs. IF Bandwidth - Typical

Applies to the Preset condition (201 points, correction off) except for the following changes:

- CF = 10 GHz
- Span = 100 MHz
- Display off (add 21 ms for display on)

Cycle time includes sweep and retrace time.

Description	N5244B/45B	
IF Bandwidth (Hz)	Cycle Time (ms)	Trace Noise Magnitude (dB rms)
600,000	2.5	0.005
100,000	3.5	0.0024
30,000	7	0.0017
10,000	26.8	0.0014
3,000	69.1	0.001
1,000	200.6	0.0008
300	617	0.0006
100	1799	0.0005
30	5954	0.0005
10	17804	0.0005
3	59247	0.0004

Table 114. Cycle Time (ms) vs. Number of Points - Typical

Applies to the Preset condition (correction off) except for the following changes:

- CF = 10 GHz
- Span = 100 MHz
- Display off (add 21 ms for display on)

Cycle time includes sweep and retrace time.

Description	IF Bandwidth (Hz)			
Number of Points	**1,000**	**10,000**	**30,000**	**600,000**
3	4.8	2.3	2	1.9
11	12.7	3.6	2.4	1.8
51	52.3	8.1	3.2	2
101	101.7	14.4	4.6	2.1
201	200.6	26.8	7	2.5
401	399	51.7	12.5	3.1
801	793	101.3	22	4.4
1,601	1584	208.3	42	7
6,401	6327	797	161.8	22.3
16,001	15813	1989	401	52.8
32,001	31623	3976	801	103.2

Table 115. Data Transfer Time[1] (ms) - Typical

NOTE The following was measured on a unit with Synthesizer 6.

Description	Number of Points				
	201	401	1601	16,001	32,001
SCPI over GPIB (Program executed on external PC[2])					
32-bit floating point	4.6	9.3	38	352	720
64-bit floating point	9.4	18.8	73.4	730	1455
ASCII	36.7	72.5	288	2882	5762
SCPI over SICL/LAN or TCP/IP Socket[3] (Program executed in the analyzer)					
32-bit floating point	<1	<1	<1	1.2	2.4
64-bit floating point	<1	<1	<1	2.3	4.6
ASCII	2.1	4	15	148	295
COM[1] (Program executed in the analyzer)					
32-bit floating point	<1	<1	<1	<1	<1
Variant type	<1	<1	1.4	12.4	25.5
DCOM over LAN[3] (Program executed on external PC)					
32-bit floating point	<1	<1	<1	2.3	4.4
Variant type	<1	1.6	5.3	52	105.5

[1] Measured with the analyzer display off. Values will increase slightly if the analyzer display is on.
[2] Measured when using the SCPI command DISPlay: VISible OFF.
[3] Values are for real and imaginary pairs, with the analyzer display off, using Gigabit Ethernet.

NOTE Specifications for Recall & Sweep Speed are not provided for the N524xB analyzers.

Table 116. Typical Cycle Time for Amplifier Noise Figure Measurement (Option 029 and S93029B)

NOTE The following was measured on a unit with Synthesizer 6.

Conditions:

- Frequency range: 4 – 6 GHz
- IF bandwidth: 1 kHz
- Noise settings: 4 MHz noise bandwidth, 10 averages, low-noise receiver
- Impedance states for vector noise cal: 5
- Other: NA application display on; correction on

Description	Number of Points			
	51	101	201	401
Scalar noise cal cycle time (ms, typical)	1154	2276	4512	8980
Vector noise cal cycle time (ms, typical)	5280	10,432	20,744	41,356

Table 117. Typical Cycle Time for Amplifier Gain Compression Measurement (Option S93086B)

NOTE The following was measured on a unit with Synthesizer 6.

Conditions:

- Frequency range: 4 – 6 GHz
- IF bandwidth: 1 kHz
- Sweep type: Smart
- Compression type: 1 dB compression from linear gain (0.05 dB tolerance)
- Other: NA application display on; correction on

Description	Number of Points			
	51	101	201	401
Cycle time (ms, typical)	175	267	430	756

Table 118. Typical Cycle Time for Amplifier Swept Intermodulation Distortion Measurement (Option S93087B)

NOTE The following was measured on a unit with Synthesizer 6.

Conditions:

- Frequency range: 4 – 6 GHz
- Main tone IF bandwidth: 10 kHz
- IM tone IF bandwidth: 1 kHz
- Measurement parameters: PwrMain (avg), IM3 (dB relative to carrier)
- Other: NA application display on; correction on

Description	Number of Points			
	51	101	201	401
Cycle time (ms, typical)	248	463	891	1752

Table 119. Typical Cycle Time for Converter Noise Figure Measurement (Option 029 and S93029B)

NOTE The following was measured on a unit with Synthesizer 6.

Conditions:

- Input frequency: 3 GHz CF, 75 MHz span
- LO frequency: 2.12 GHz fixed
- Output frequency: 880 MHz CF, 75 MHz span
- IF bandwidth: 1 kHz
- Noise settings: 4 MHz noise bandwidth, 10 averages, low-noise receiver
- Impedance states for vector noise cal: 5
- Other: NA application display on; correction on

Description	Number of Points			
	51	101	201	401
Scalar noise cal cycle time (ms, typical)	1330	2617	5181	10,230
Vector noise cal cycle time (ms, typical)	5540	10,958	21,626	42,977

Table 120. Typical Cycle Time for Converter Measurement with SMC + Phase (Option S93083B)

NOTE The following was measured on a unit with Synthesizer 6.

Conditions:

- Input frequency: 3 GHz CF, 75 MHz span
- LO frequency: 2.12 GHz fixed
- Output frequency: 880 MHz CF, 75 MHz span
- Other: NA application display on; correction on (includes match correction but not SC12 sweep)

Description	Number of Points			
	51	101	201	401
Cycle time, 10 kHz IF bandwidth (ms, typical)	87	123	193	330
Cycle time, 1 kHz IF bandwidth (ms, typical)	215	375	690	1320

Table 121. Typical Cycle Time for Converter Gain Compression Measurement (Option S93086B)

NOTE The following was measured on a unit with Synthesizer 6.

Conditions:

- Input frequency: 3 GHz CF, 75 MHz span
- LO frequency: 2.12 GHz fixed
- Output frequency: 880 MHz CF, 75 MHz span
- IF bandwidth: 1 kHz
- Sweep type: Smart
- Compression type: 1 dB compression from linear gain (0.05 dB tolerance)
- Other: NA application display on; correction on

Description	Number of Points			
	51	101	201	401
Cycle time (ms, typical)	235	342	554	980

Table 122. Typical Cycle Time for Converter Swept Intermodulation Distortion Measurement (Option S93087B)

NOTE The following was measured on a unit with Synthesizer 6.

Conditions:

- Input frequency: 3 GHz CF, 75 MHz span
- LO frequency: 2.12 GHz fixed
- Output frequency: 880 MHz CF, 75 MHz span
- Main tone IF bandwidth: 10 kHz
- IM tone IF bandwidth: 1 kHz
- Measurement parameters: PwrMain (avg), IM3 (dB relative to carrier)
- Other: NA application display on; correction on

Description	Number of Points			
	51	101	201	401
Cycle time (ms, typical)	474	905	1767	3517

Front-Panel Jumpers

NOTE All PNA-X options have the following front-panel jumpers for each port.

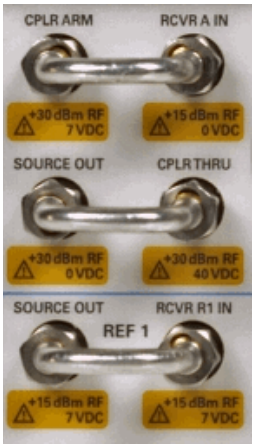

Table 123. Measurement Receiver Inputs (dBm) - Typical

(RCVR A, B, C, D IN) @ 0.1dB Typical Compression

Description	All Options
10 MHz to 1 GHz	-3
1 GHz to 2 GHz	-2
2 GHz to 10 GHz	-2
10 GHz to 16 GHz	-4
16 GHz to 26.5 GHz	-4
26.5 GHz to 43.5 GHz	-5
43.5 GHz to 50 GHz	-6

Table 124. Reference Receiver Inputs and Reference Source Outputs (dBm) - Typical

Description	Option 201, 401		Option 21x, 41x		Option 22x, 42x	
	Filtered Mode[1]	Hi Power Mode[1]	Filtered Mode[1]	Hi Power Mode[1]	Filtered Mode[1]	Hi Power Mode[1]
10 MHz to 50 MHz	-33	-25	-32	-27	-32	-25
50 MHz to 500 MHz	-21	-16	-19	-14	-19	-14
500 MHz to 1 GHz	-9	-4	-7	-2	-7	-2
1 GHz to 2 GHz	-9	-4	-7	-3	-7	-2
2 GHz to 3.2 GHz	-8	-6	-6	-4	-7	-5
3.2 GHz to 10 GHz	-3	-3	0	0	-3	-3
10 GHz to 16 GHz	-3	-3	-1	-1	-3	-3
16 GHz to 26.5 GHz	-3	-3	-1	-1	-4	-4
26.5 GHz to 30 GHz	-3	-3	0	0	-3	-3
30 GHz to 32 GHz	-4	-4	-2	-2	-5	-5
32 GHz to 35 GHz	-2	-2	0	0	-2	-2
35 GHz to 43.5 GHz	-3	-3	-1	-1	-5	-5
43.5 GHz to 47 GHz	-6	-6	-5	-5	-23	-23
47 GHz to 50 GHz	-19	-19	-17	-17	-22	-22

[1] In Filtered Mode, the signal path goes through filters to minimize harmonics below 3.2 GHz. In Hi Power Mode, the signal bypasses the filters to maximize output power.

Table 125. Reference Receiver Inputs and Reference Source Outputs (dBm) - Typical

(RCVR R2, R3, R4 IN, REF 2, 3, 4 SOURCE OUT) @ Max Specified Output Power

Description	Option 401		Options 201, 401	Option 41x		Options 21x, 41x
	RCVR R3 IN, REF 3 SOURCE OUT	RCVR R3 IN, REF 3 SOURCE OUT	RCVR R2, R4 IN, REF 2, 4 SOURCE OUT	RCVR R3 IN, REF 3 SOURCE OUT	RCVR R3 IN, REF 3 SOURCE OUT	RCVR R2, R4 IN, REF 2, 4 SOURCE OUT
	Filtered Mode[1]	Hi Power Mode[1]		Filtered Mode[1]	Hi Power Mode[1]	
10 MHz to 50 MHz	-31	-23	-27	-31	-26	-25
50 MHz to 500 MHz	-19	-14	-14	-18	-13	-14
500 MHz to 1 GHz	-7	-2	-2	-6	-1	-2
1 GHz to 2 GHz	-7	-2	-2	-6	-2	-2
2 GHz to 3.2 GHz	-7	-5	-2	-4	-2	-2
3.2 GHz to 10 GHz	-1	-1	-1	1	1	-1
10 GHz to 16 GHz	-1	-1	-1	0	0	-2
16 GHz to 26.5 GHz	-1	-1	-1	1	1	-2
26.5 GHz to 30 GHz	0	0	-1	2	2	-3
30 GHz to 32 GHz	-1	-1	-2	0	0	-5
32 GHz to 35 GHz	0	0	-1	2	2	-3
35 GHz to 43.5 GHz	-2	-2	-2	0	0	-5
43.5 GHz to 47 GHz	-5	-5	-5	-4	-4	-9
47 GHz to 50 GHz	-17	-17	-17	-16	-16	-21

[1] In Filtered Mode, the signal path goes through filters to minimize harmonics below 3.2 GHz. In Hi Power Mode, the signal bypasses the filters to maximize output power.

Table 126. Reference Receiver Inputs and Reference Source Outputs (dBm) - Typical

(RCVR R2, R3, R4 IN, REF 2, 3, 4 SOURCE OUT) @ Max Specified Output Power

Description	Options 42x		Options 22x, 42x
	RCVR R3 IN, REF 3 SOURCE OUT	RCVR R3 IN, REF 3 SOURCE OUT	RCVR R2, R4 IN, REF 2, 4 SOURCE OUT
	Filtered Mode[1]	Hi Power Mode[1]	
10 MHz to 50 MHz	-31	-24	-29
50 MHz to 500 MHz	-18	-13	-16
500 MHz to 2 GHz	-6	-1	-4
2 GHz to 3.2 GHz	-5	-3	-4
3.2 GHz to 10 GHz	0	0	0
10 GHz to 26.5 GHz	-2	-2	-2
26.5 GHz to 30 GHz	-1	-1	-2
30 GHz to 32 GHz	-3	-3	-4
32 GHz to 35 GHz	0	0	-2
35 GHz to 43.5 GHz	-3	-3	-4
43.5 GHz to 47 GHz	-22	-22	-8
47 GHz to 50 GHz	-21	-21	-21

[1] In Filtered Mode, the signal path goes through filters to minimize harmonics below 3.2 GHz. In Hi Power Mode, the signal bypasses the filters to maximize output power.

Table 127. Source Outputs (dBm) - Typical

(PORT 1, 2, 3, 4 SOURCE OUT) @ Max Specified Output Power

Description	Options 201, 401			Options 21x, 41x		
	PORT 1, 3 SOURCE OUT		PORT 2, 4 SOURCE OUT	PORT 1, 3 SOURCE OUT		PORT 2, 4 SOURCE OUT
	Filtered Mode[1]	Hi Power Mode[1]		Filtered Mode[1]	Hi Power Mode[1]	
10 MHz to 50 MHz	4	12	12	5	10	13
50 MHz to 1 GHz	8	13	13	9	14	14
1 GHz to 2 GHz	9	14	14	9	13	14
2 GHz to 3.2 GHz	9	11	14	9	11	14
3.2 GHz to 10 GHz	14	14	14	14	14	14
10 GHz to 16 GHz	14	14	14	13	13	13
16 GHz to 26.5 GHz	14	15	15	13	13	13
26.5 GHz to 30 GHz	14	14	14	12	12	12
30 GHz to 32 GHz	13	13	13	10	10	10
32 GHz to 35 GHz	14	14	14	12	12	12
35 GHz to 43.5 GHz	11	11	11	8	8	8
43.5 GHz to 47 GHz	8	8	8	4	4	4
47 GHz to 50 GHz	-5	-5	-5	-8	-8	-8

[1] In Filtered Mode, the signal path goes through filters to minimize harmonics below 3.2 GHz. In Hi Power Mode, the signal bypasses the filters to maximize output power.

Table 128. Source Outputs (dBm) - Typical

(PORT 1, 2, 3, 4 SOURCE OUT) @ Max Specified Output Power

Description	Options 22x, 42x, 029		
	PORT 1, 3 SOURCE OUT		PORT 2, 4 SOURCE OUT
	Filtered Mode[1]	Hi Power Mode[1]	
10 MHz to 50 MHz	5	12	11
50 MHz to 2 GHz	9	14	14
2 GHz to 3.2 GHz	9	11	14
3.2 GHz to 10 GHz	14	14	14
10 GHz to 26.5 GHz	13	13	13
26.5 GHz to 30 GHz	12	12	12
30 GHz to 32 GHz	10	10	10
32 GHz to 35 GHz	12	12	12
35 GHz to 43.5 GHz	8	8	8
43.5 GHz to 47 GHz	3	3	3
47 GHz to 50 GHz	-9	-9	-10

[1] In Filtered Mode, the signal path goes through filters to minimize harmonics below 3.2 GHz. In Hi Power Mode, the signal bypasses the filters to maximize output power.

Table 129. Coupler Inputs (dB) - Typical

(PORT 1, 2, 3, 4 CPLR THRU) Insertion Loss of Coupler Thru

Description	Options 201, 401	Options 21x, 41x, 22x, 42x	Option 029[1]
	All Ports	All Ports	Ports 1, 2
10 MHz to 500 MHz	0.25	1	1.5
500 MHz-to 2 GHz	0.5	1	1.5
2 GHz to 10 GHz	1	1	1.5
10 GHz to 16 GHz	1	2	2.5
16 GHz to 26.5 GHz	1.5	2.5	3.0
26.5 GHz to 35 GHz	2	3	3.7
35 GHz to 43.5 GHz	2.5	4	4.7
43.5 GHz to 47 GHz	2.5	5	5.7
47 GHz to 50 GHz	3	6	7

[1] Option 029 affects only port 1 and 2 coupler thru insertion loss. Refer to Options 21x, 41x, 22x, 42x for the coupler thru insertion loss on port 3 or port 4. Port 1 impedance tuner switch is in bypass position and port 2 noise receiver switch is in normal position.

Table 130. Damage Level - Typical

Description	RF (dBm)	DC (v)
RCVR A, B, C, D IN	15	7
RCVR R1, R2, R3, R4 IN	15	7
REF 1 SOURCE OUT	15	7
REF 2, 3, 4 SOURCE OUT	30	7
PORT 1, 2, 3, 4 SOURCE OUT	27	5
PORT 1CPLR THRU	27 (10[1]) (20[3])	40 (7[2]) (50[3])
PORT 2, 3, 4 CPLR THRU	27 (20[3])	40 (7[2]) (50[3])
PORT 1, 2, 3, 4 CPLR ARM	30	7

1 When the source impedance tuner is switched in the path of Option 224 or 423 with Option S93029A configuration, +10 dBm input to port 1 CPLR THRU damages the tuner.
2 With a thru connection between test ports of option 217, 222, 417 or 422 configuration, 7 VDC input to CPLR THRU ports damages the source attenuator on the connected port.
3 With option 425 installed.

Test Set Block Diagrams

NOTE For best readability, use a color printer for printing the following graphics.

Legend

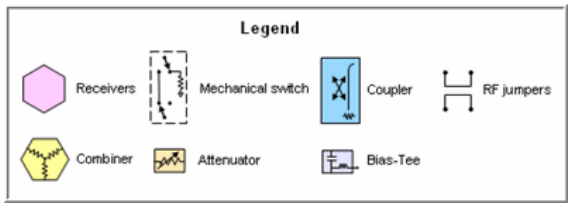

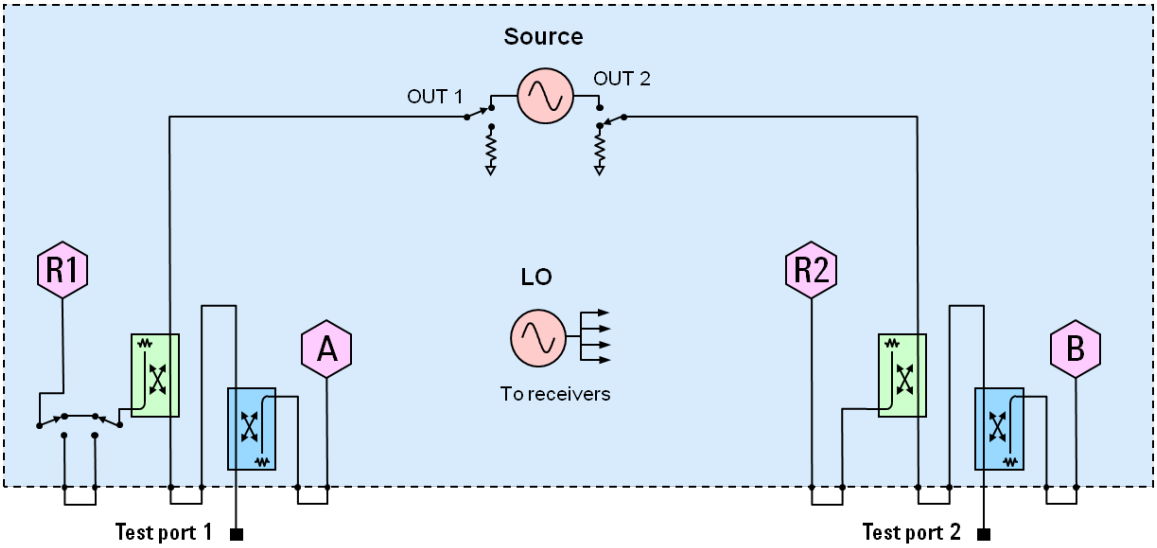

Figure 1. Port N5244B and N5245B Base Unit Option 201

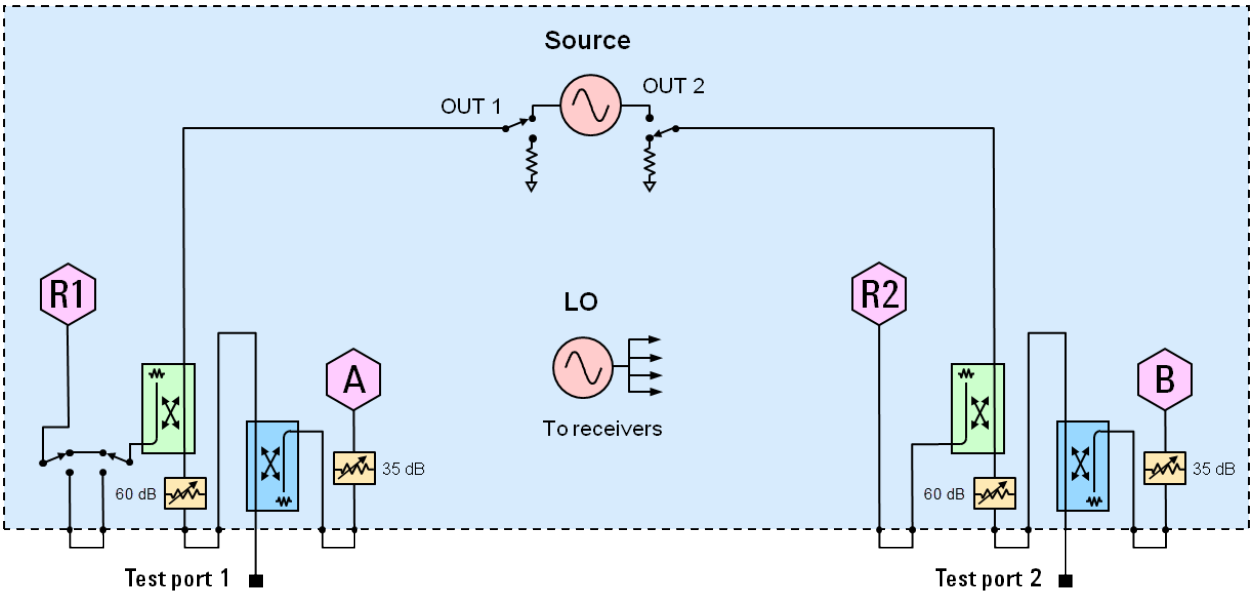

Figure 2. 2-Port N5244B and N5245B Option 217

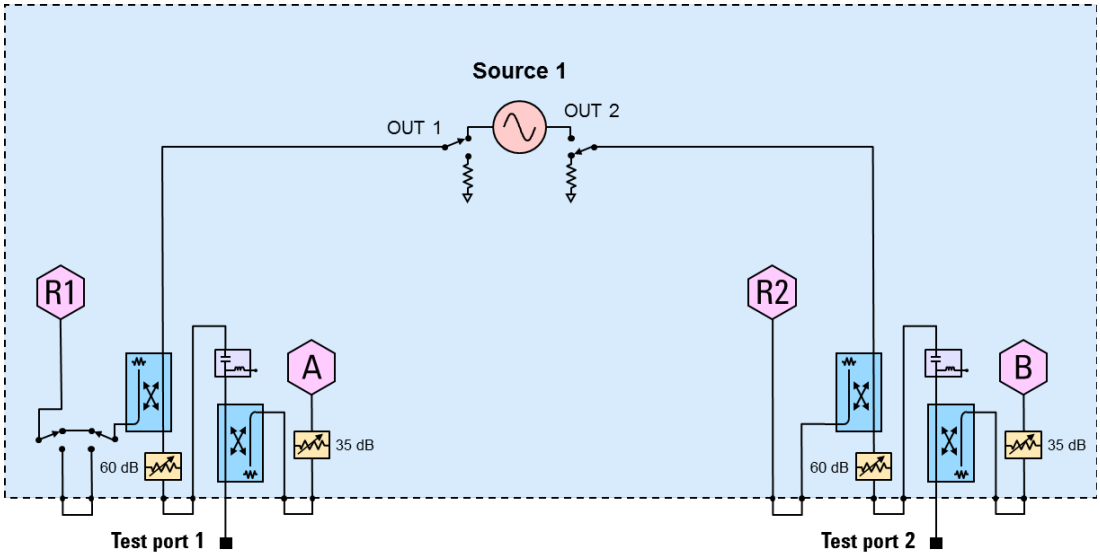

Figure 3. 2-Port N5244B and N5245B Option 219

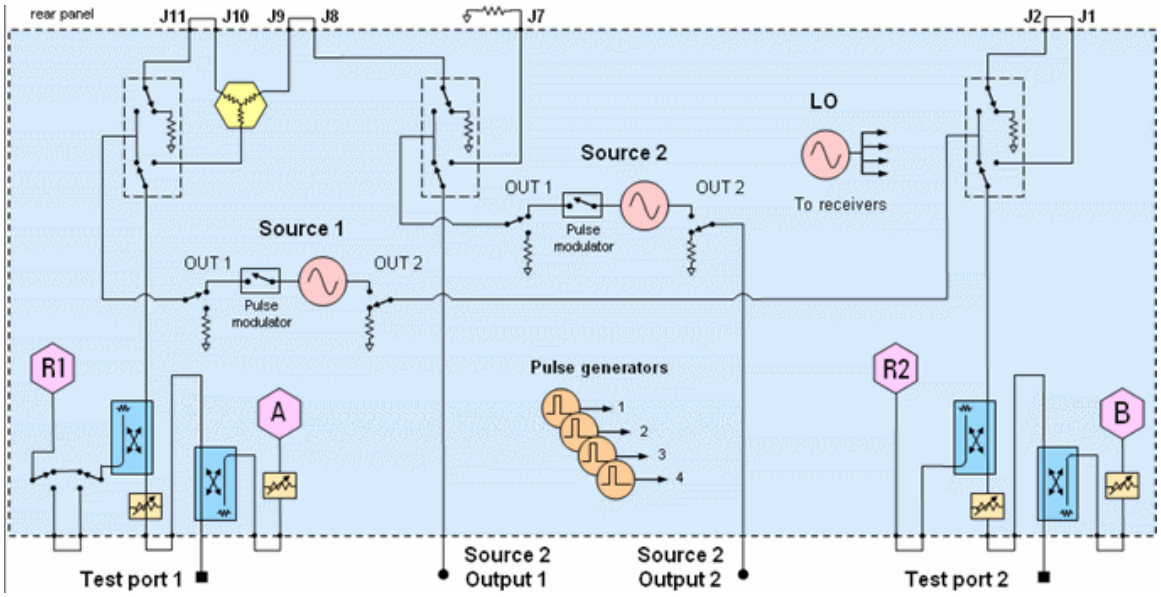

Figure 4. 2-Port N5244B and N5245B Option 222

Also shown, Option 025 adds 4 pulse generators. Option 021 and 022 adds pulse modulators.

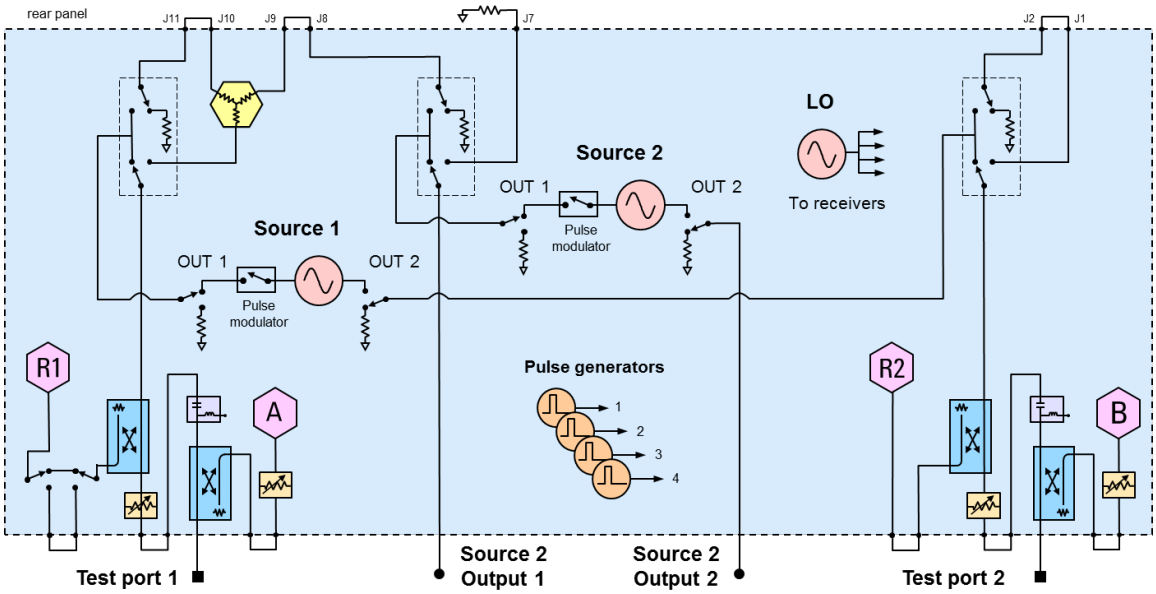

Figure 5. 2-Port N5244B and N5245B Option 224

Also shown, Option 025 adds 4 pulse generators. Option 021 and 022 adds pulse modulators.

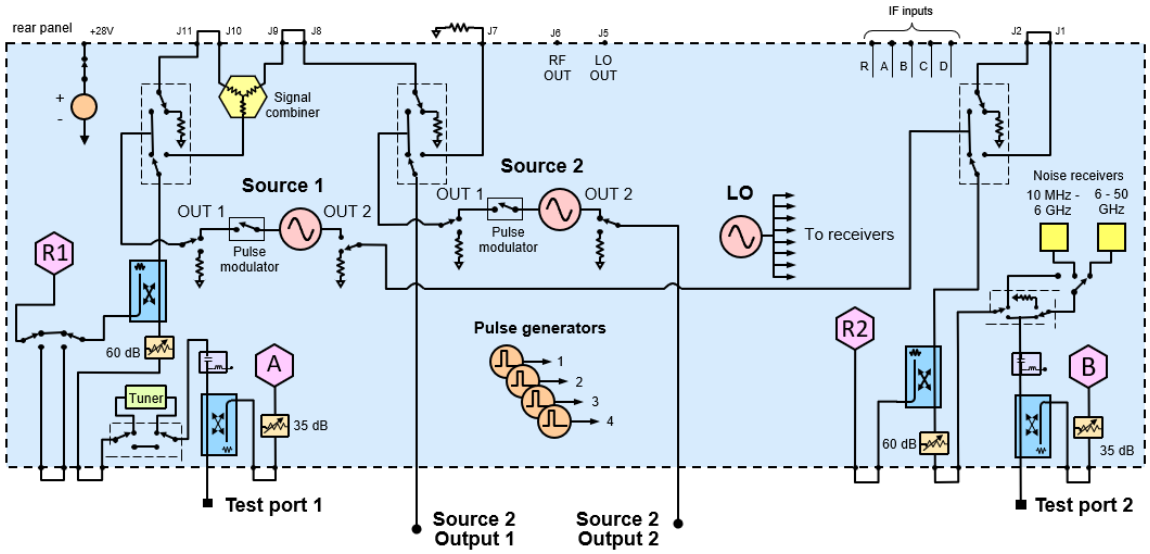

Figure 6. 2-Port N5244B and N5245B Option 224 with 029

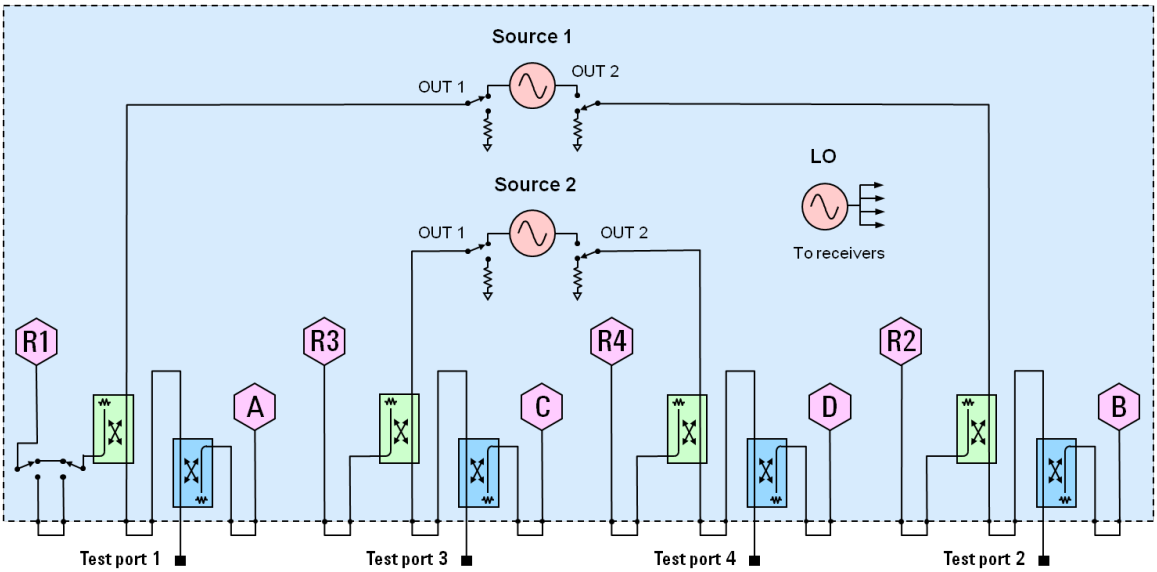

Figure 7. 4-Port N5244B and N5245B Base Unit Option 401

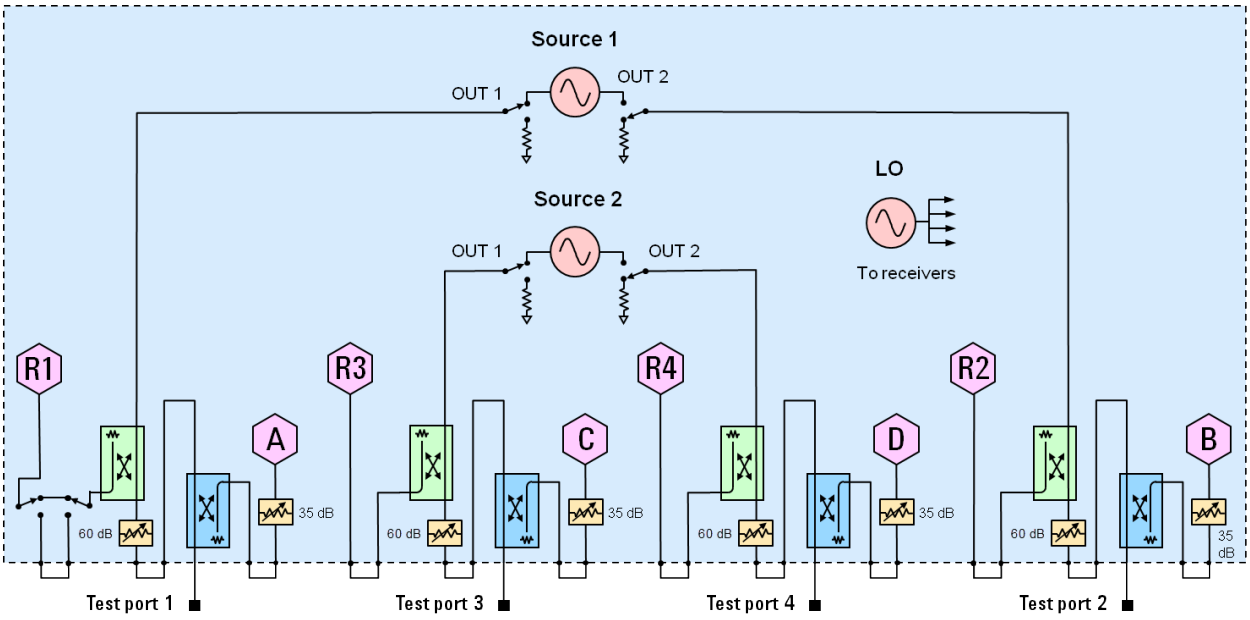

Figure 8. 4-Port N5244B and N5245B Option 417

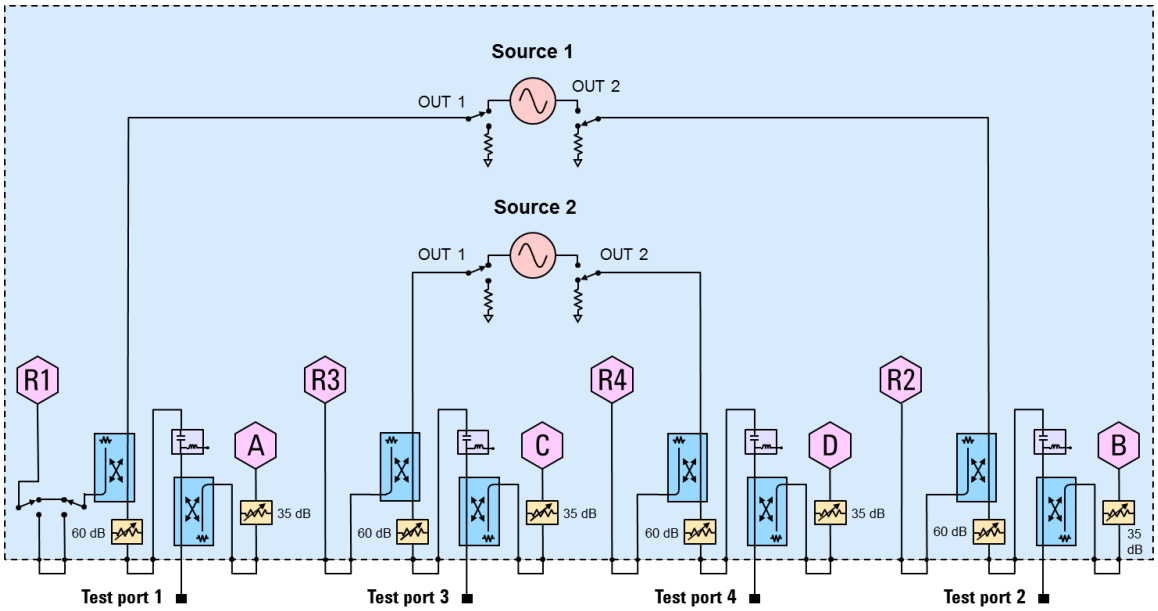

Figure 9. 4-Port N5244B and N5245B Option 419

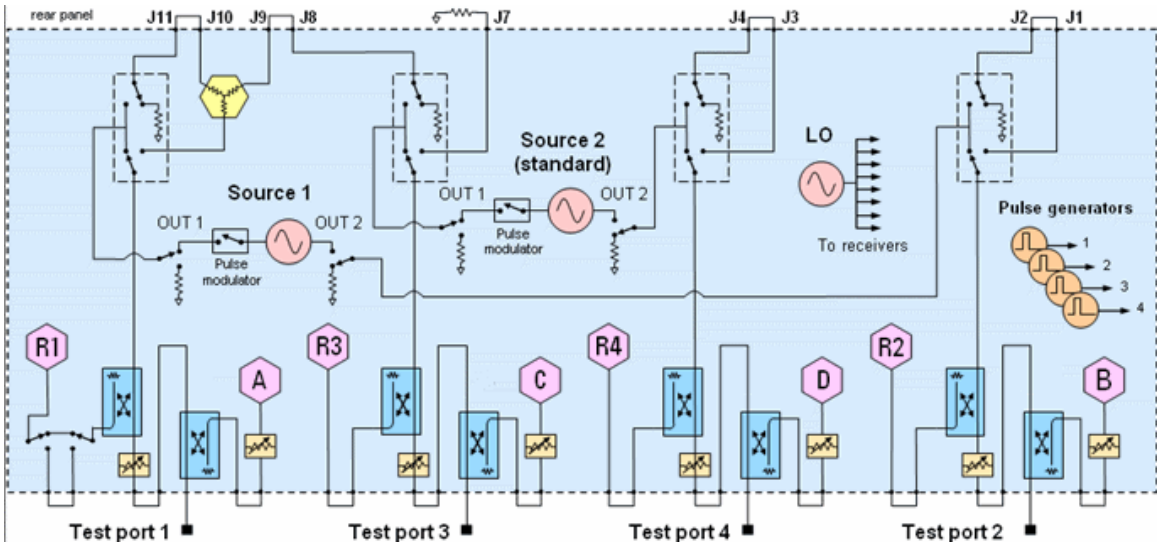

Figure 10. 4-Port N5244B and N5245B Option 422

Also shown, Option 025 adds 4 pulse generators. Option 021 and 022 adds pulse modulators.

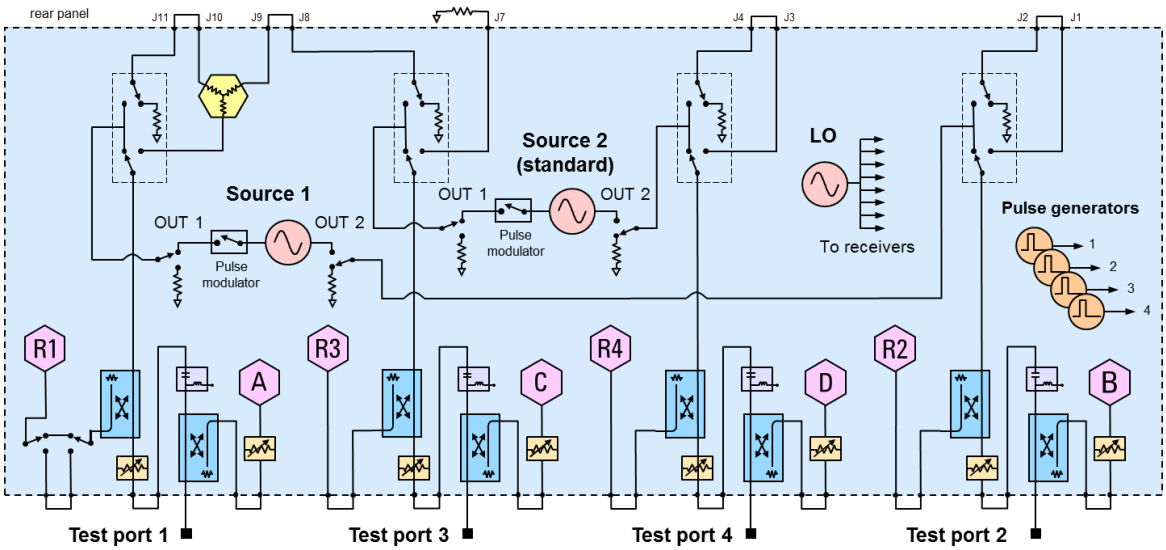

Figure 11. 4-Port N5244B and N5245B Option 423

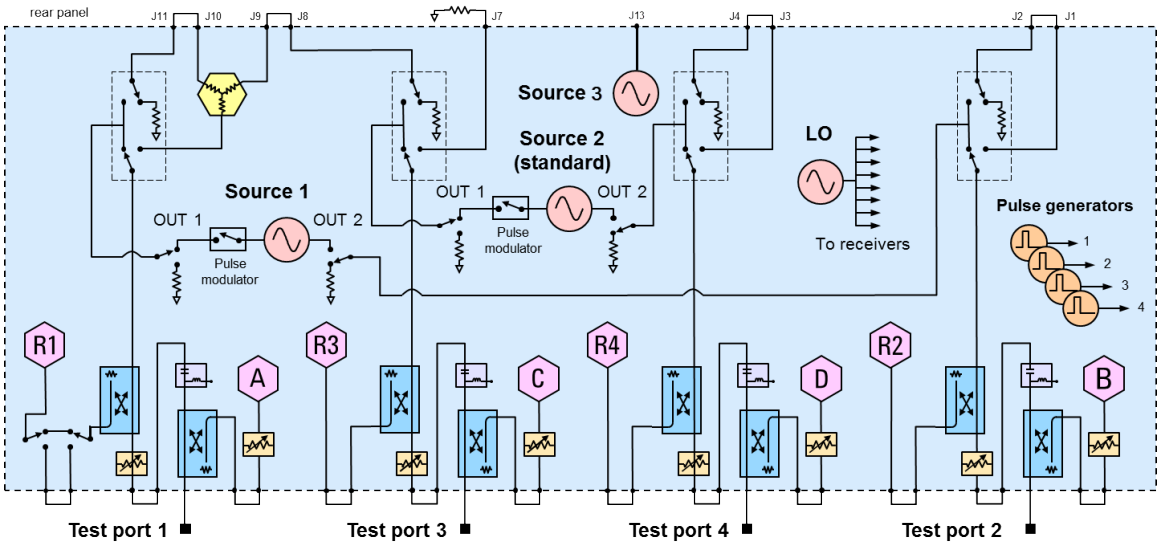

Figure 12. 4-Port N5244B and N5245B Option 423 with XSB

NOTE Option XSB is available with Option 422 also. Option 422 does not have the bias tees.

Also shown, Option 025 adds 4 pulse generators. Option 021 and 022 adds pulse modulators.

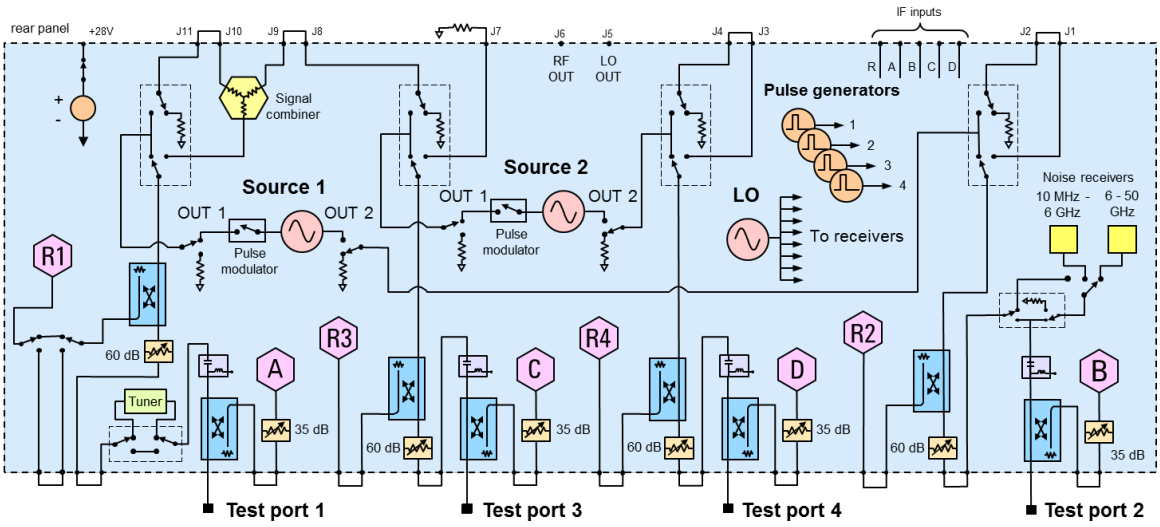

Figure 13. 4-Port N5244B and N5245B Option 423 with 029

The following LFE block diagram shows how the low-frequency hardware is configured for a single test port. The other ports are configured similarly.

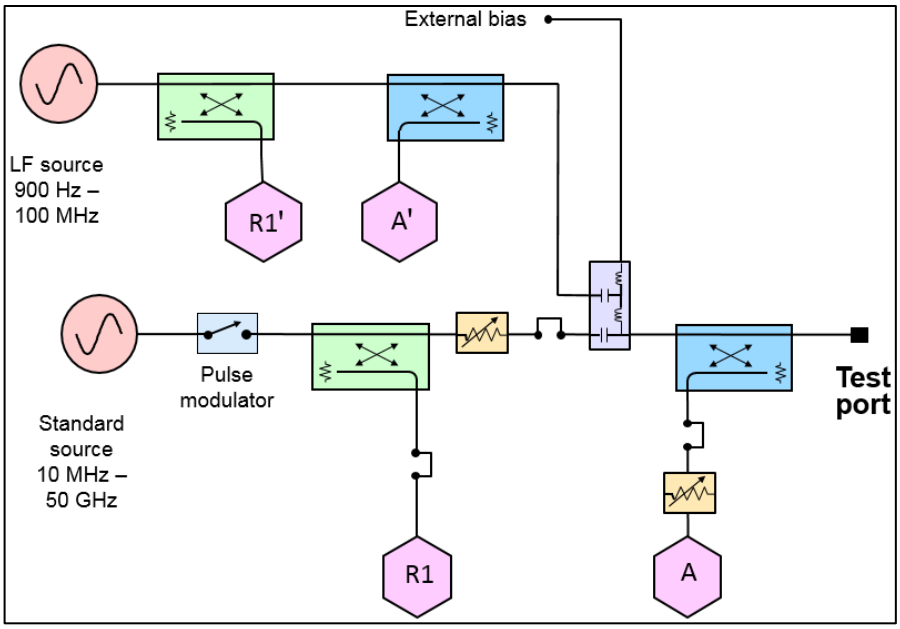

Figure 14. N5244B and N5245B LFE Options

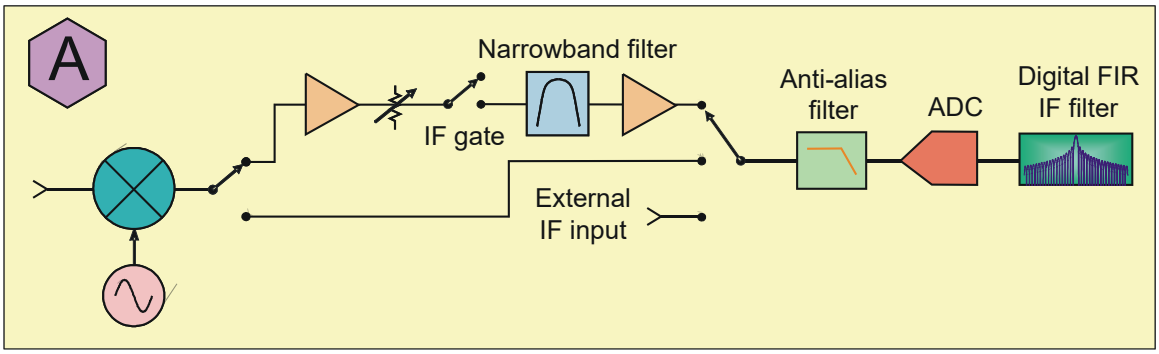

Figure 15. Receiver Block Diagram

This information is subject to change without notice.
© Keysight Technologies 2017 - 2025
Print Date: August 6, 2025
N5245-90028